ARKETIPO / INDOOR

SOFA BROWN SUGAR

designed by Mauro Lipparini 2018

STRUCTURE: wood.
STRUCTURE UPHOLSTERY: expanded polyurethane of varied densities (D40 + D30 + D25) covered with synthetic lining 230gr and coupled synthetic lining 6mm.
SEAT CUSHION UPHOLSTERY: expanded polyurethane of varied densities (D35 + memory foam) covered with synthetic lining "Cotherm" 300gr.
BACK CUSHION UPHOLSTERY: outer cover in 100% twilled downproof cotton lining; filling in mixed feathers (50% goose feathers and 50% polyester fibre).
SPRINGING: elastic belts.
SEAT HEIGHT: 42 cm - 45 cm with feet h. 15 cm.
ARM HEIGHT: 57 cm (LARGE); 67 cm (SLIM).
FEET: metal, finishes: black nickel or titanium, or micaceous brown or oxy grey varnished, h.12 cm. On request feet can be supplied 3 cm higher with an extra charge.
ATTENTION: Back cushions are not included in the prices but they are required. The dimensions indicated are just a suggestion, they can be changed according to the client's taste.

Sofa / corner sofa SLIM

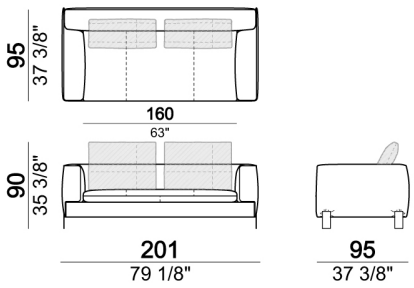

Back cushion

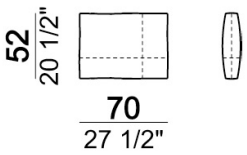

Sofa LARGE

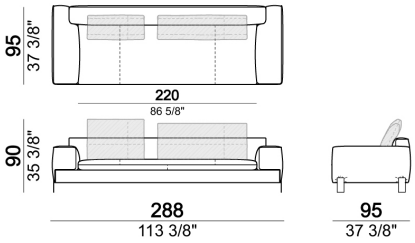

Right or left unit / corner unit

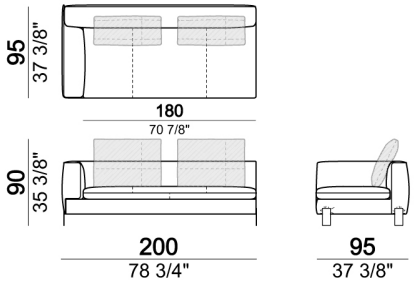

Composition "H" (left unit LARGE 184 cm + right corner unit 174 cm + central unit 180 cm with right pouf + 2 back cushions 110 cm + 1 back cushion 90 cm)

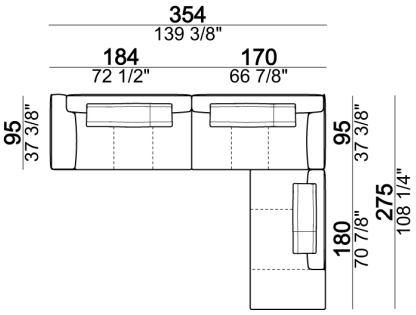

Back cushion

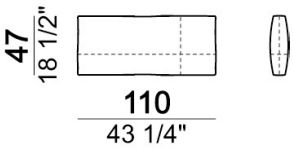

Central unit

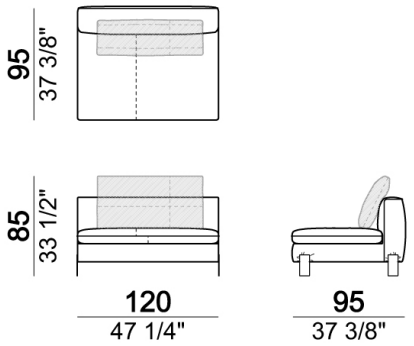

Sofa / corner sofa

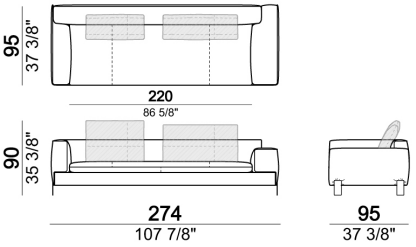

Composition "D" (left unit LARGE 184 cm + chaise longue LARGE with right long arm 131x160 cm + 1 back cushion 110 cm + 1 back cushion 70 cm)

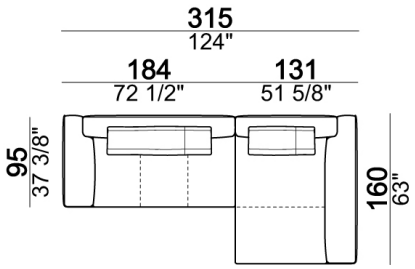

Pouf

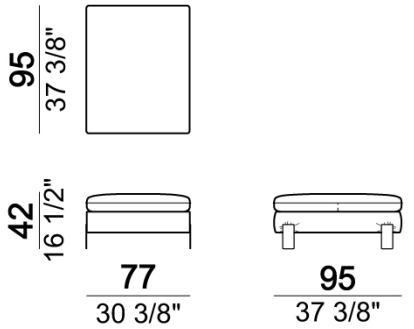

Back cushion

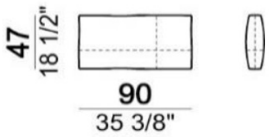

Sofa / corner sofa

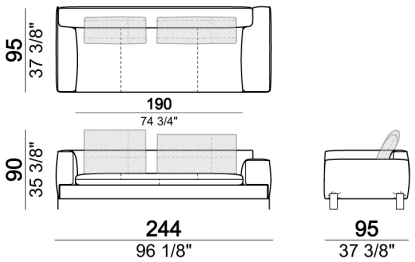

Composition "E" (left unit 204 + chaise longue LARGE with right long arm 131x175 cm + 3 back cushions 70 cm)

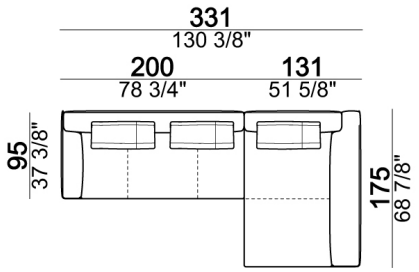

Sofa / corner sofa SLIM

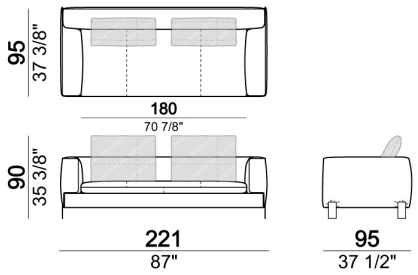

Sofa LARGE

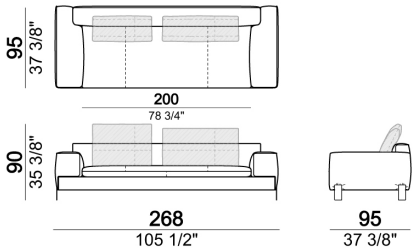

Pouf

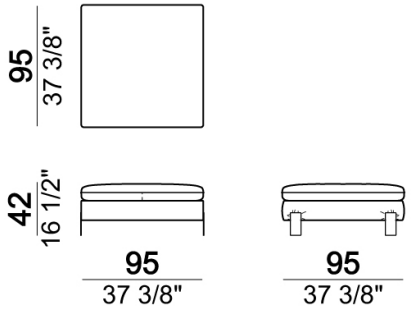

Composition "G" (left corner sofa 278 cm + left unit 204 cm + 3 back cushions 70 cm + 1 back cushion 90 cm)

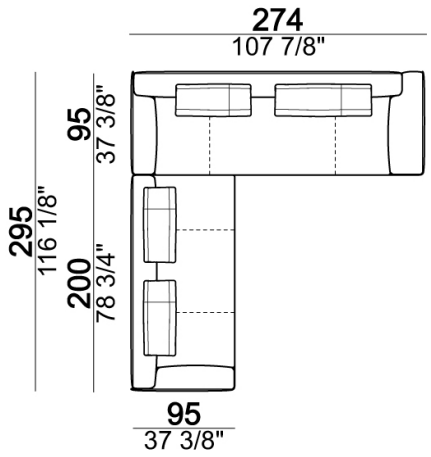

Right or left unit / corner unit with right or left pouf

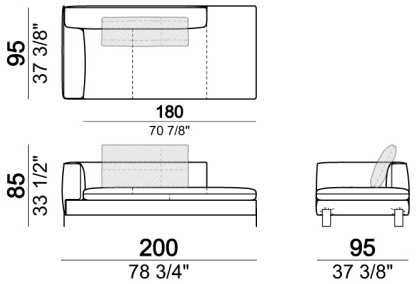

Chaise-longue LARGE with right or left long arm

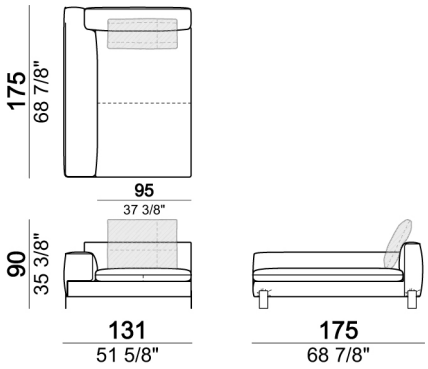

Right or left unit LARGE

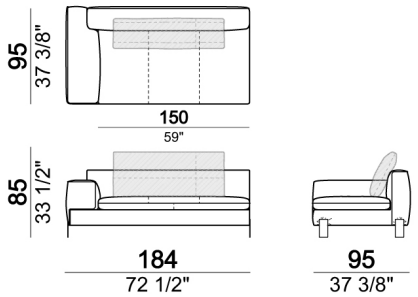

Central unit with right or left pouf

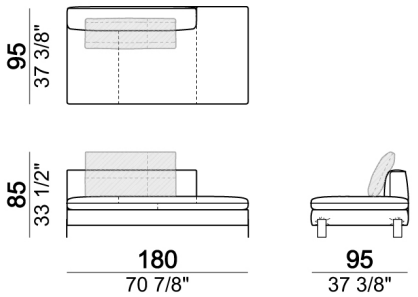

Composition "I" (right unit 204 cm + dormeuse 95x160 cm + 3 back cushions 70 cm)

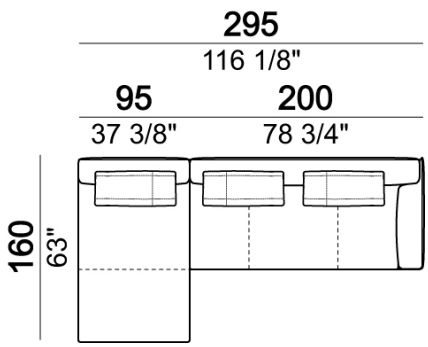

Right or left unit LARGE

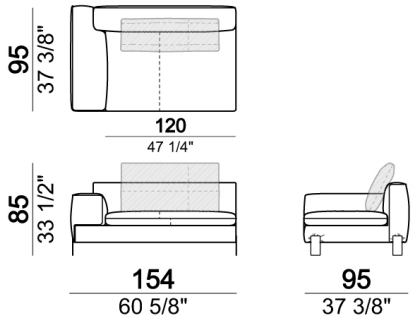

Right or left unit / corner unit

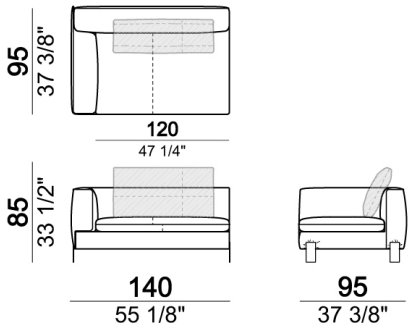

Composition "F" (left unit 204 cm + chaise longue LARGE with right long arm 131x175 cm + 3 back cushions 70 cm).

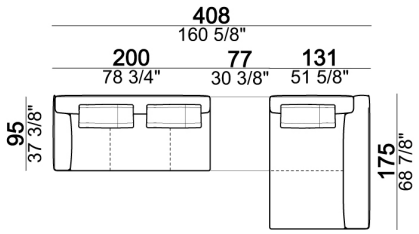

Backrest roll

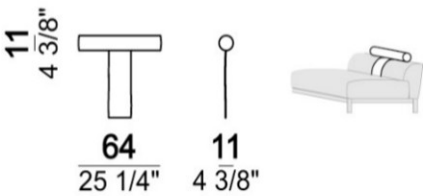

Chaise-longue LARGE with right or left long arm

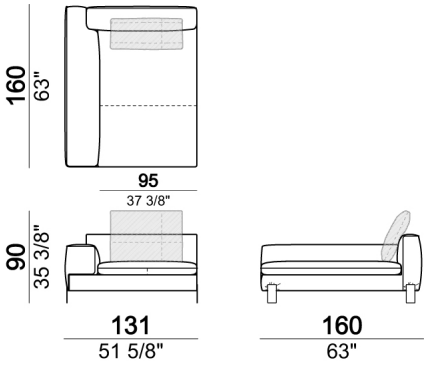

Right or left unit / corner unit

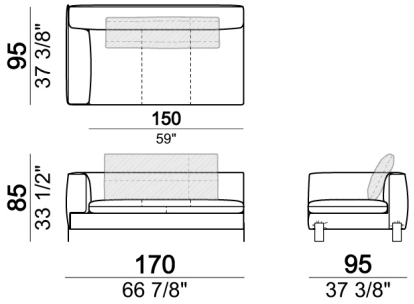

Composition "L" (left unit 204 cm + right unit LARGE 184 cm + 2 back cushions 70 cm + 1 back cushion 110 cm).

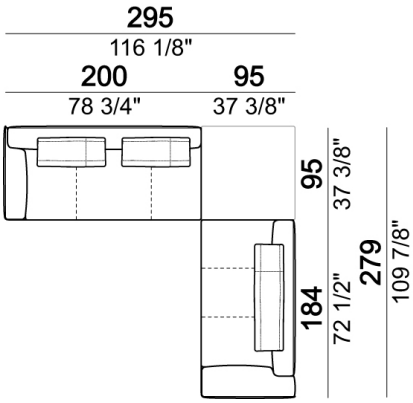

Dormeuse

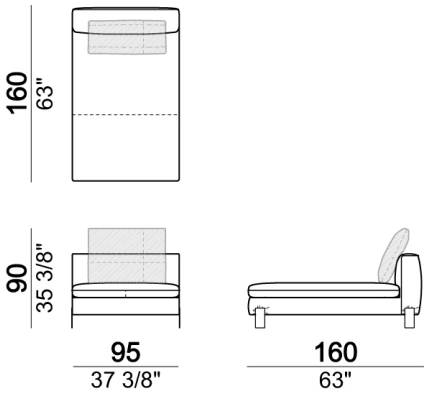

Composition "B" (dormeuse 95x160 cm + right unit LARGE 234 cm + 2 back cushions 70 cm + 1 back cushion 90 cm)

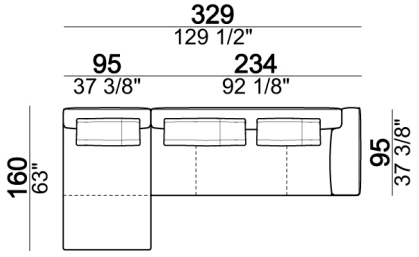

Unit LARGE with right or left pouf

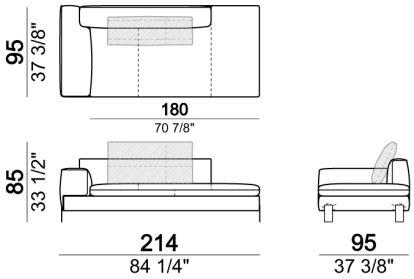

Right or left unit LARGE

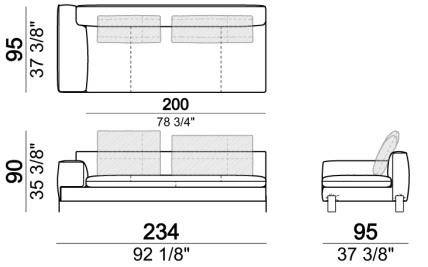

Pouf

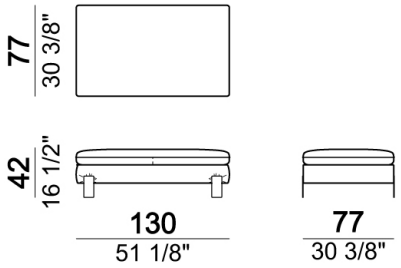

Composition "A" (left unit 204 cm + dormeuse 95x160 cm + right unit LARGE 234 cm + 4 back cushions 70 cm + 1 back cushion 90 cm)

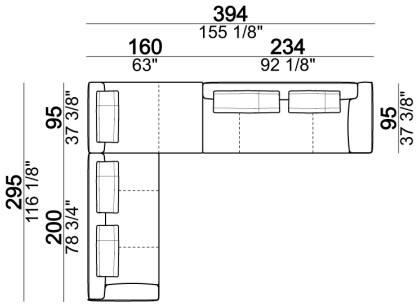
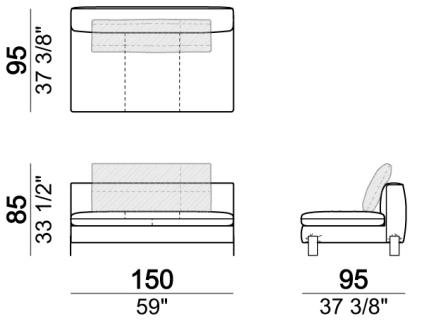
Central unit