Alma suspension

CONTROVENTO

AURA | LUME | NOVA
SUSPENSION

MULTIPLA
SUSPENSION

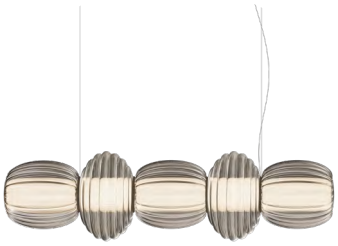

PLURIMA
SUSPENSION

Alma transforms light into a poetic presence. Blown glass and pleated fabric diffusers blend together in suspension, table and floor lamps. Sculptural shapes and delicate colors create light, contemporary compositions that redefine space with elegance and a touch of surprise, creating welcoming, refined environments with a distinctive character.

Alma trasforma la luce in una presenza poetica. Vetro soffiato e diffusore in tessuto plissé si fondono in sospensioni, lampade da tavolo e da terra. Forme scultoree e colori delicati danno vita a composizioni leggere e contemporanee, capaci di ridefinire lo spazio con eleganza e sorpresa, creando ambienti accoglienti, raffinati e dal carattere distintivo.

P3 **Alma Aura suspension**
P4 **Alma Lume suspension**
P5 **Alma Nova suspension**
P6 **Alma Multipla suspension**
P7 **Alma Plurima suspension**

contardi

SUSPENSION DETAILS | CARATTERISTICHE LAMPADA SOSPENSIONE

ALMA AURA SUSPENSION

contardi

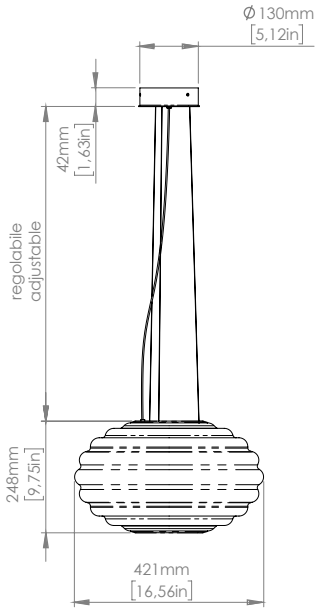

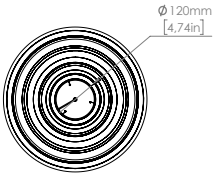

LIGHT EFFECT | EFFETTO LUMINOSO

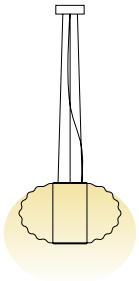

LIGHT SOURCE | FONTE LUMINOSA

220-240V · 110V | 1x16 W LED Module
2.280 Lm | 2.700 K | CRI >90

DIMMING | DIMMERAZIONE

Phase cut (Triac) | Taglio di fase
DALI or 1-10V on demand | DALI o 1-10V su richiesta

CABLE | CAVO

Coaxial electric cable | Cavo elettrico coassiale
Steel cables for balancing | Cavi di bilanciamento in acciaio
H.2000mm [78.7"]

FINISHES | FINITURE

METAL FRAME | STRUTTURA METALLICA

Champagne
Champagne

PLISSÉ COTTON SHADE | PARALUME IN COTONE PLISSETTATO

White
Bianco

GLASS DIFFUSER | DIFFUSORE IN VETRO

Amber
Ambra

Plum
Ametista

Clear
Trasparente

Packaging | Imballi

AURA	490x490xh.430mm [19.2"x19.2"xh.16.9"]
	7 kg [15.5 lbs]

SUSPENSION DETAILS | CARATTERISTICHE LAMPADA SOSPENSIONE

ALMA LUME SUSPENSION

contardi

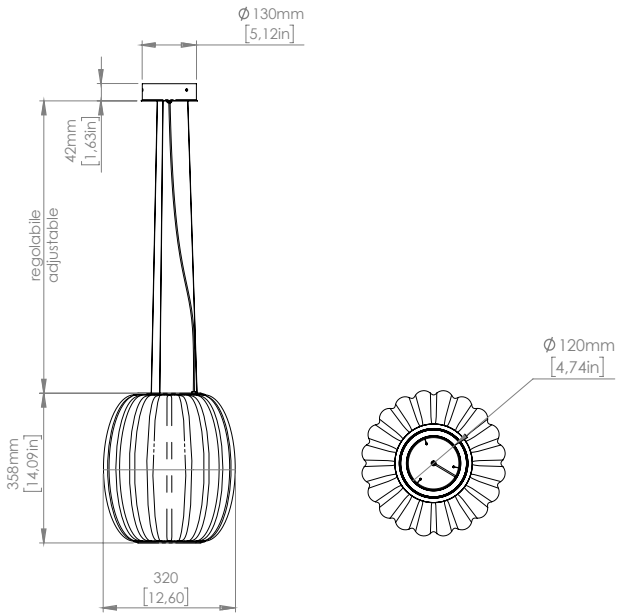

LIGHT EFFECT | EFFETTO LUMINOSO

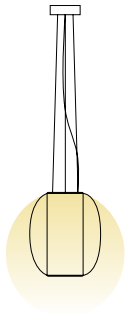

LIGHT SOURCE | FONTE LUMINOSA

220-240V · 110V | 1x16 W LED Module
2.280 Lm | 2.700 K | CRI >90

DIMMING | DIMMERAZIONE

Phase cut (Triac) | Taglio di fase
DALI or 1-10V on demand | DALI o 1-10V su richiesta

CABLE | CAVO

Coaxial electric cable | Cavo elettrico coassiale
Steel cables for balancing | Cavi di bilanciamento in acciaio
H.2000mm [78.7"]

FINISHES | FINITURE

METAL FRAME | STRUTTURA METALLICA

Champagne
Champagne

PLISSÉ COTTON SHADE | PARALUME IN COTONE PLISSETTATO

White
Bianco

GLASS DIFFUSER | DIFFUSORE IN VETRO

Amber
Ambra

Plum
Ametista

Clear
Trasparente

Packaging | Imballi

LUME	390x390xh.530mm [15.3"x15.3"xh.20.8"]
	7 kg [15.5 lbs]

SUSPENSION DETAILS | CARATTERISTICHE LAMPADA SOSPENSIONE

ALMA NOVA SUSPENSION

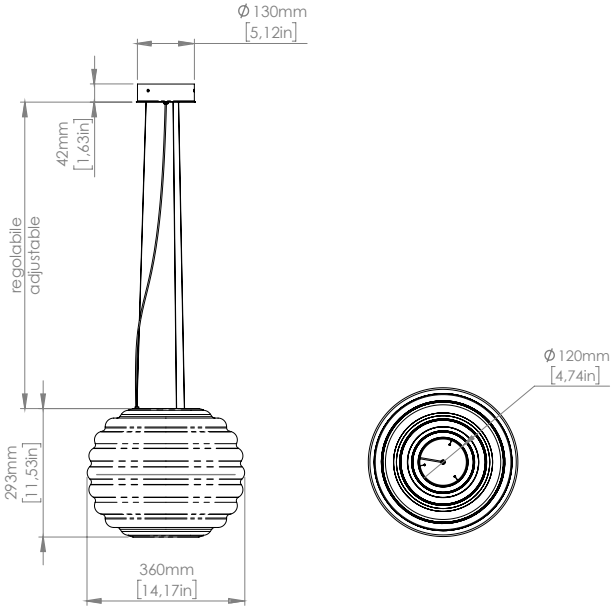

LIGHT EFFECT | EFFETTO LUMINOSO

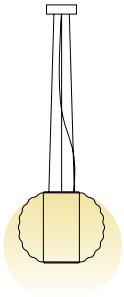

LIGHT SOURCE | FONTE LUMINOSA

220-240V · 110V | 1x16 W LED Module
2.280 Lm | 2.700 K | CRI >90

DIMMING | DIMMERAZIONE

Phase cut (Triac) | Taglio di fase
DALI or 1-10V on demand | DALI o 1-10V su richiesta

CABLE | CAVO

Coaxial electric cable | Cavo elettrico coassiale
Steel cables for balancing | Cavi di bilanciamento in acciaio
H.2000mm [78.7"]

FINISHES | FINITURE

METAL FRAME | STRUTTURA METALLICA

Champagne
Champagne

PLISSÉ COTTON SHADE | PARALUME IN COTONE PLISSETTATO

White
Bianco

GLASS DIFFUSER | DIFFUSORE IN VETRO

Amber
Ambra

Plum
Ametista

Clear
Trasparente

Packaging | Imballi

NOVA	430x430xh.160mm [16.9"x16.9"xh.6.2"]
	6 kg [13.2 lbs]

SUSPENSION DETAILS | CARATTERISTICHE LAMPADA SOSPENSIONE

ALMA MULTIPLA SUSPENSION

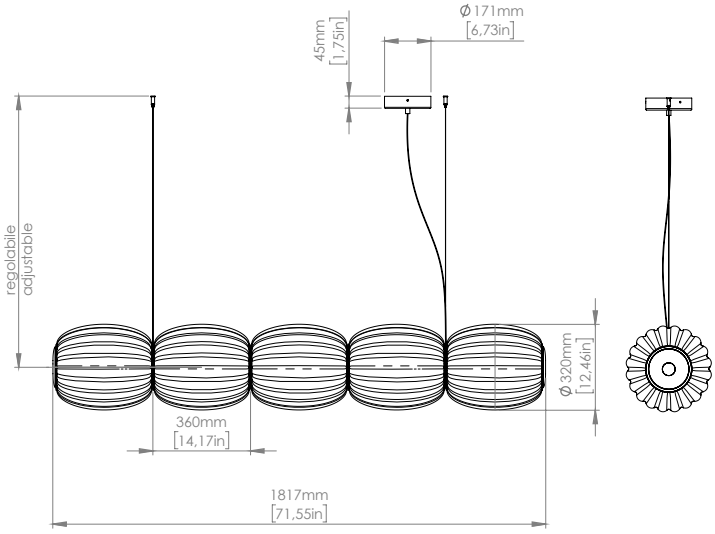

LIGHT EFFECT | EFFETTO LUMINOSO

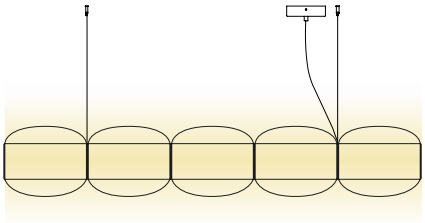

LIGHT SOURCE | FONTE LUMINOSA

220-240V · 110V | 1x80 W Custom strip LED
10.912 Lm | 2.700 K | CRI >90

DIMMING | DIMMERAZIONE

Phase cut (Triac) | Taglio di fase
DALI or 1-10V on demand | DALI o 1-10V su richiesta

CABLE | CAVO

Coaxial electric cable | Cavo elettrico coassiale
Steel cables for balancing | Cavi di bilanciamento in acciaio
H.2000mm [78.7"]

FINISHES | FINITURE

METAL FRAME | STRUTTURA METALLICA

Champagne
Champagne

PLISSÉ COTTON SHADE | PARALUME IN COTONE PLISSETTATO

White
Bianco

GLASS DIFFUSER | DIFFUSORE IN VETRO

Clear
Trasparente

Packaging | Imballi

MULTIPLA	2050x560xh.670mm [80.7"x22"xh.26.3"]
	60 kg [132.2 lbs]

SUSPENSION DETAILS | CARATTERISTICHE LAMPADA SOSPENSIONE

ALMA PLURIMA SUSPENSION

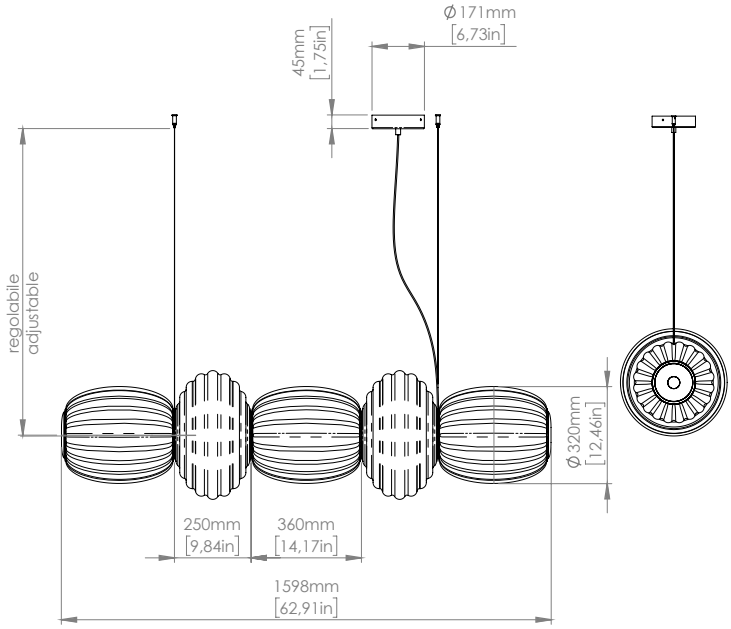

LIGHT EFFECT | EFFETTO LUMINOSO

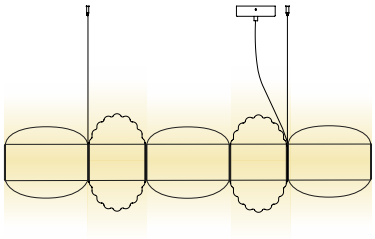

LIGHT SOURCE | FONTE LUMINOSA

220-240V · 110V | 1x75 W Custom strip LED
9.390 Lm | 2.700 K | CRI >90

DIMMING | DIMMERAZIONE

Phase cut (Triac) | Taglio di fase
DALI or 1-10V on demand | DALI o 1-10V su richiesta

CABLE | CAVO

Coaxial electric cable | Cavo elettrico coassiale
Steel cables for balancing | Cavi di bilanciamento in acciaio
H.2000mm [78.7"]

FINISHES | FINITURE

METAL FRAME | STRUTTURA METALLICA

Champagne
Champagne

PLISSÉ COTTON SHADE | PARALUME IN COTONE PLISSETTATO

White
Bianco

GLASS DIFFUSER | DIFFUSORE IN VETRO

Clear
Trasparente

Packaging | Imballi

PLURIMA	1920x750xh.870mm [75.5"x29.5"xh.34.2"]
	55 kg [121.2 lbs]

CONTARDI LIGHTING Srl
ITALY HEADQUARTERS
contardi-italia.com

CONTARDI USA Inc
USA BRANCH
contardi-usa.com

Copyright and/or design rights subsist in this drawing. No part of this drawing may be reproduced in any material form (including photocopying or storing in any medium electronic means, whether or not intentionally and whether or not as part or a larger publication) without the express permission of the copyright owner, Contardi Lighting S.r.l.. Further and without prejudice to the above, this drawing and all information relating thereto is confidential, and shall not be communicated to a third party without the consent of Contardi lighting srl. Contardi Lighting Srl asserts all rights to be identified as the author of the work and otherwise.

WARNING: The doing of any unauthorised act in relation to a copyright work may result in both a civil claim for damages and criminal prosecution.