ARKETIPO / INDOOR

SOFA GOOD TIMES

designed by Giuseppe Vigano' 2025

STRUCTURE: Wood.

FRAME UPHOLSTERY: expanded polyurethane HD60 covered with synthetic lining 3mm.

ARM AND BACK UPHOLSTERY: multi-density expanded polyurethane (T35+T40) covered with resin lining 200gr and synthetic lining 280gr.

SEAT CUSHION UPHOLSTERY: multi-density expanded polyurethane (T40+T35+MPH40) covered with synthetic lining 280gr and 3mm.

BACK CUSHION UPHOLSTERY: 100% white twilled cotton cover, filling in 50% goose feathers and 50% “Fiber Ball” (polyester fibre).

SPRINGING: elastic belts.

SEAT HEIGHT: 43 cm – 47 cm with feet h. 25 cm.

ARM HEIGHT: 71 cm.

FEET: metal varnished micaceous brown or oxy grey h.21 cm. On request feet can be supplied 4 cm higher by

using spacers, with an extra charge.

Composition 'A' (Chaise-longue with left arm 194X179 cm + right unit 244 cm)

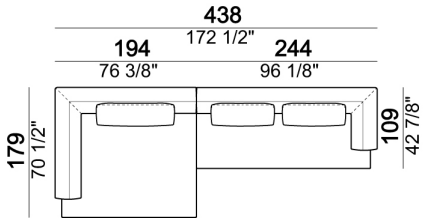

Composition 'B' (Chaise-longue with left arm 136x191 cm + right unit 218 cm)

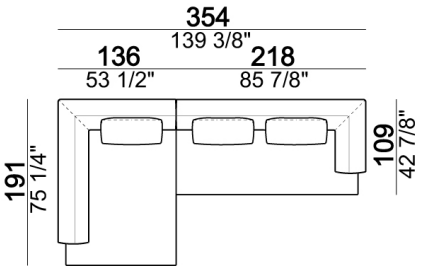

Right or left corner unit with back cushions 70 cm

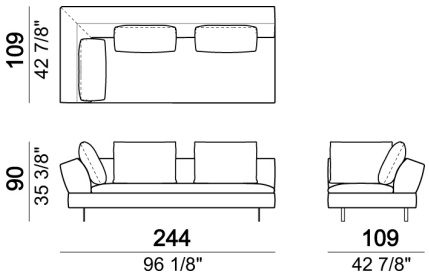

Pouf

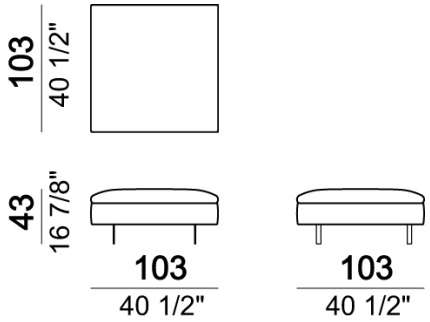

central unit with back cushions 80 cm

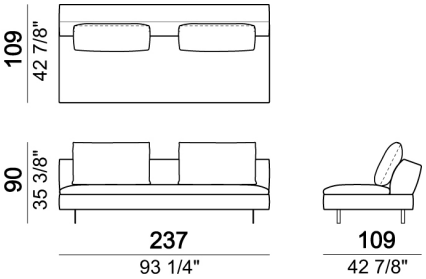

Back cushion

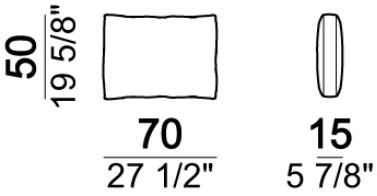

central unit with back cushions 80 cm

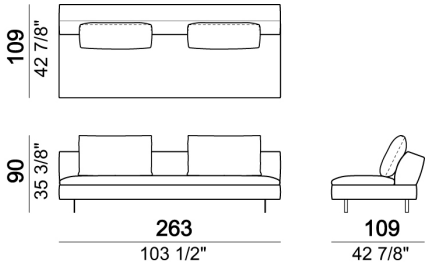

Sofa with back cushions 80 cm

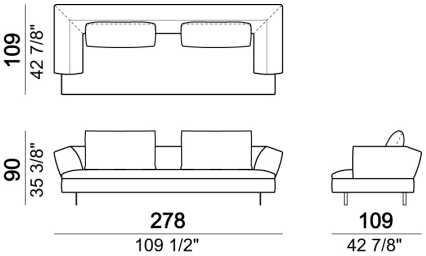

Right or left unit with back cushions 70 cm

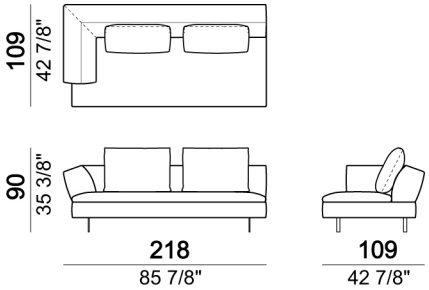

Sofa with back cushions 70 cm

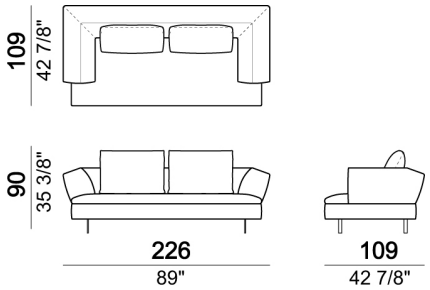

Right or left unit with back cushion 70 cm

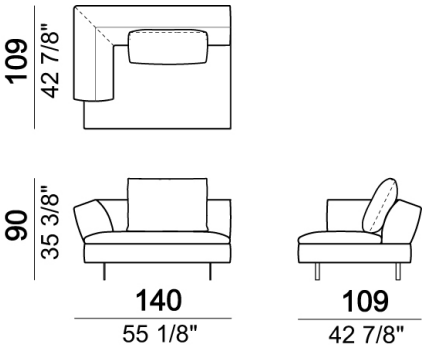

Pouf

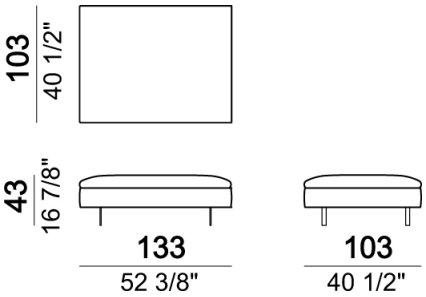

Chaise-longue with right or left arm with back cushion 70 cm

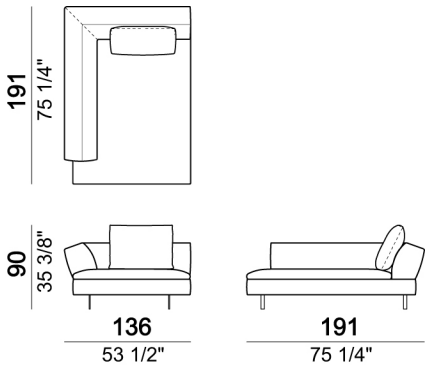

Right or left unit with back cushions 80 cm

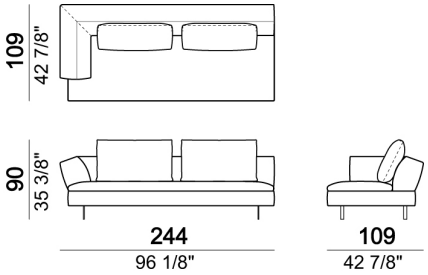

Back cushion

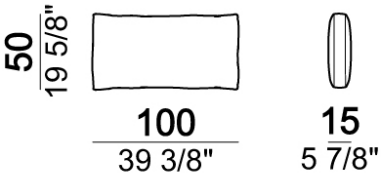

Back cushion

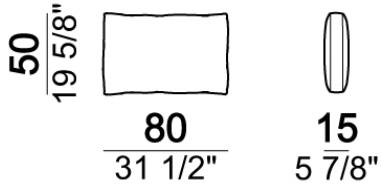

Chaise-longue with right or left arm with back cushion 100 cm

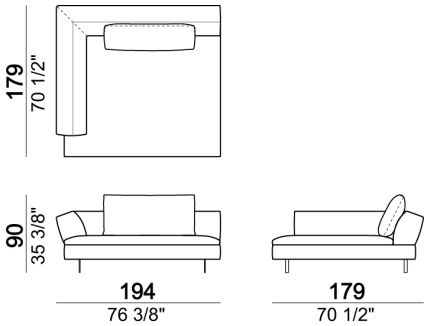

Sofa with back cushions 100 cm

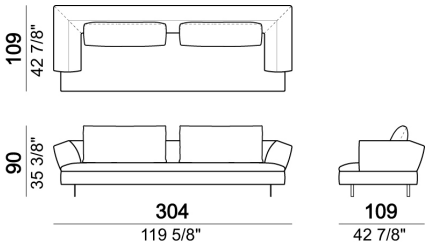

central unit with back cushions 70 cm

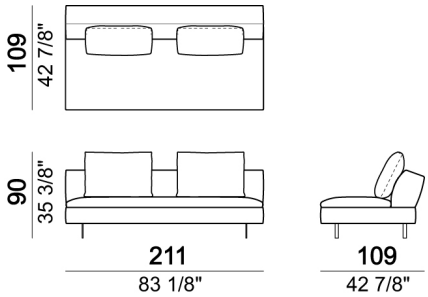

Sofa with back cushions 70 cm

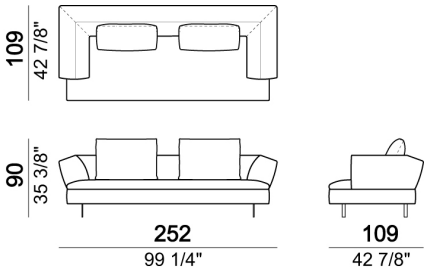
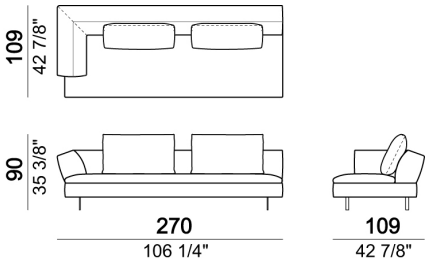
Right or left unit with back cushions 80 cm