ARKETIPO / INDOOR

SOFA MILKY WAY

designed by Mauro Lipparini 2024

STRUCTURE: wood.
FRAME AND ARMS UPHOLSTERY: multi-density expanded polyurethane (HR30/28+T30P+T40P) covered with resin lining 100gr.
SEAT CUSHION UPHOLSTERY: multi-density expanded polyurethane (T35+MPH40) covered with coupled cotton and resin lining
(Olisuppht 230gr).
BACK CUSHION UPHOLSTERY: outer cover in downproof cotton coupled with resin lining; filling in mixed feathers (70% goose
feathers and 30% polyester fibre).
BACK SUPPORT: expanded polyurethane T40P covered with resin lining 100gr and cotton 20/24.
SPRINGING: elastic belts.
SEAT HEIGHT: 42 cm.
ARM HEIGHT: 61 cm.
FEET: Metal, micaceous brown varnished or black nickel, h.5 cm.

Right or left semicircular unit

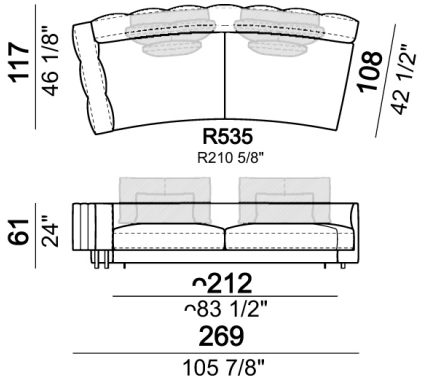

Right or left unit

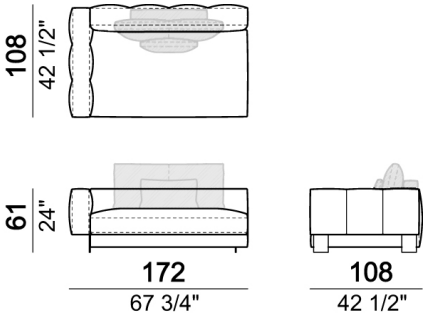

Sofa

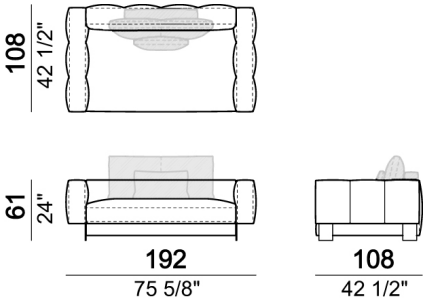

Composition 'O' (left unit 173x176 cm with angle 30° + central unit 152 cm + left corner unit 232 cm + pouf 105x108 cm + 3 back cushion sets 7100352 + 2 back cushion sets 7100354 + 2 back cushions 55x40 cm)

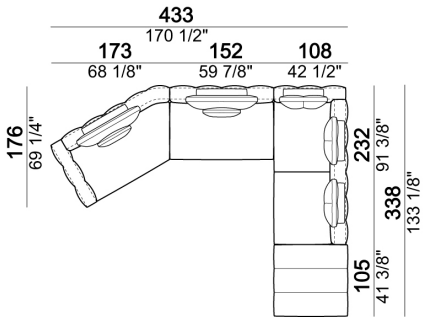

Back cushion set

Composition 'P' (daybed 172x174 cm with left long arm + right corner unit 262 cm + right unit 262 cm + 1 back cushion set 7100352 + 4 back cushion sets 7100353 + 1 back cushion set 7100354 + 1 back cushion 55x40 cm)

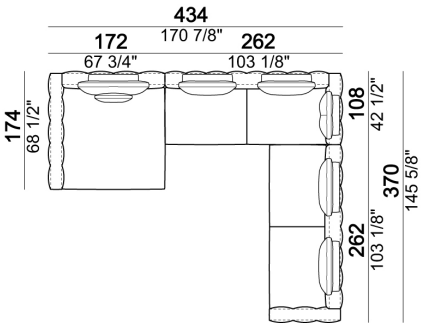

Right or left corner unit

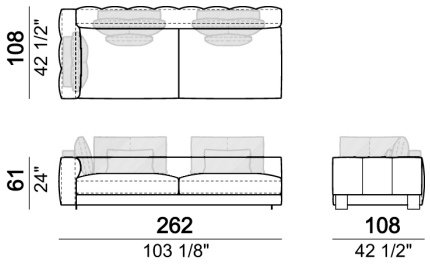

Pouf

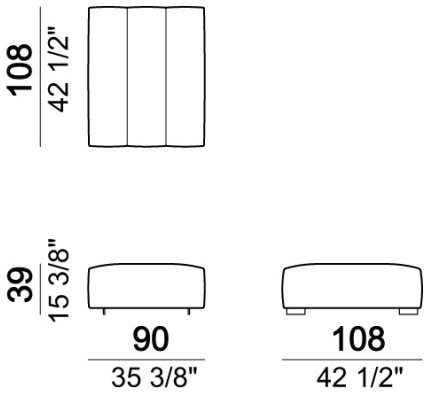

Composition 'H' (left semicircular unit 199 cm + pouf 105x108 cm + right semicircular unit 199 cm + 2 back cushion sets 7100354 + 2 back cushions 55x40 cm)

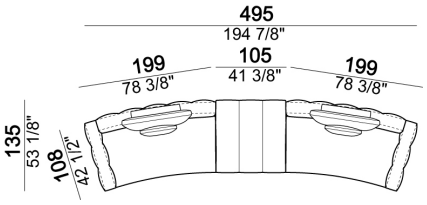

Chaise-longue with right or left short arm

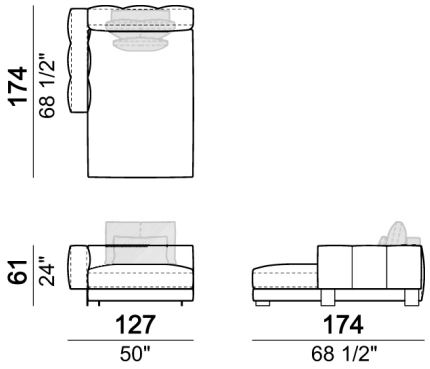

Central semicircural unit

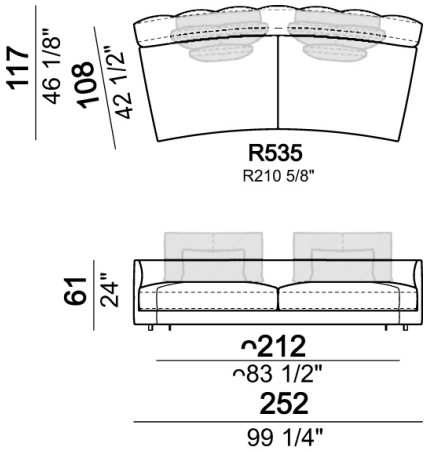

Composition 'T' (Central unit with left angle 30° 159x167 cm + central unit 152 cm + right daybed 172x174 cm + pouf 105x108 + 3 back cushion sets 7100354 + 2 back cushions 55x40 cm)

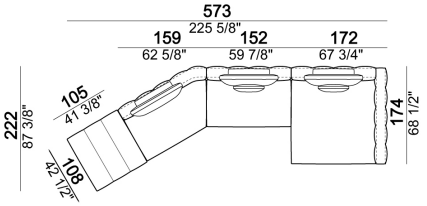

Right or left unit

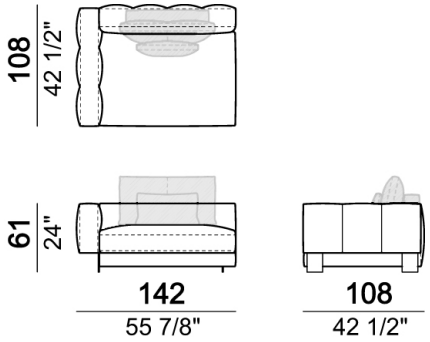

Daybed with right or left long arm

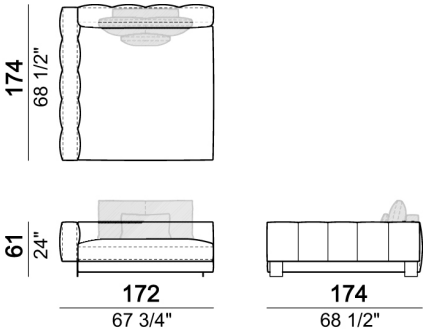

Right or left corner unit

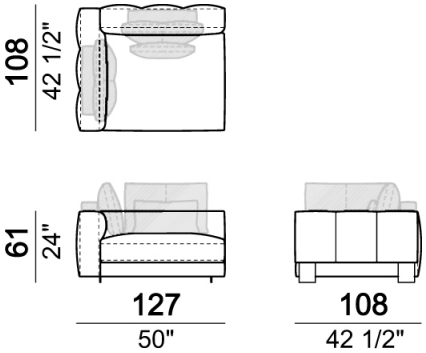

Central unit with right or left pouf

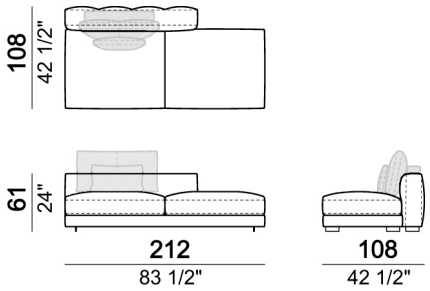

Sofa

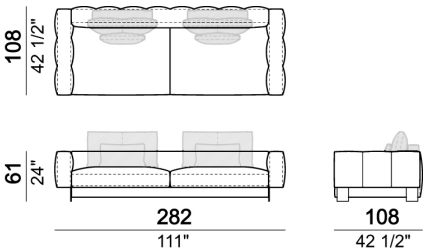

Back cushion set

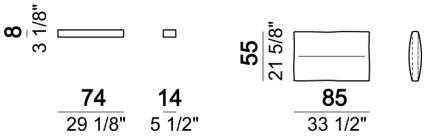

Chaise-longue with right or left short arm

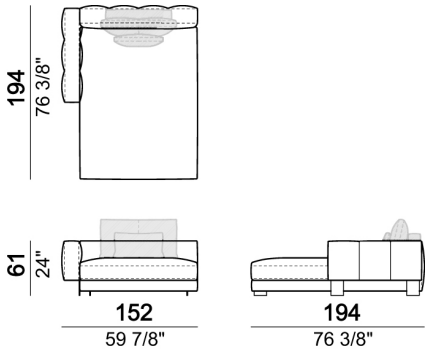

Dormeuse

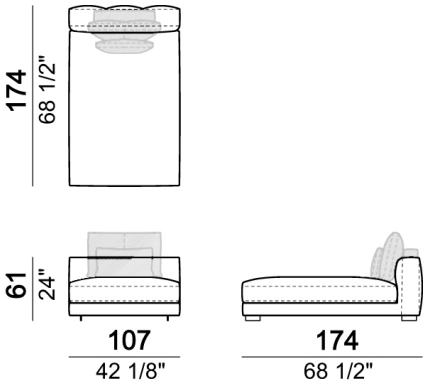

Right or left unit

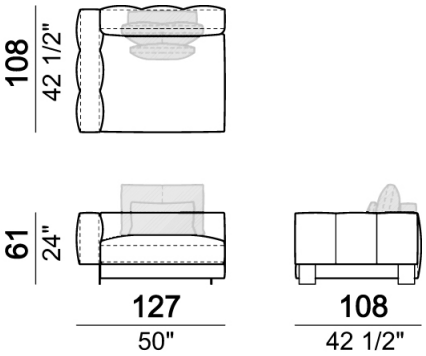

Back cushion set

Composition 'G' (left semicircular unit 199 cm + curved pouf 113x173 cm + 2 back cushion sets 7100352)

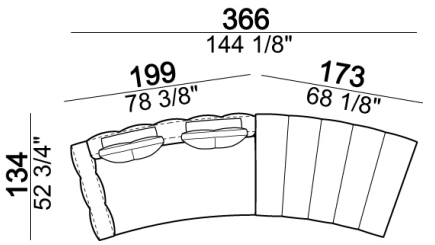

Dormeuse

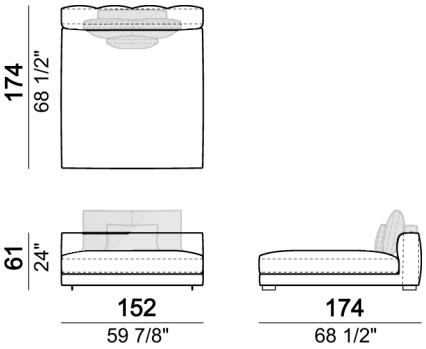

Central semicircural unit

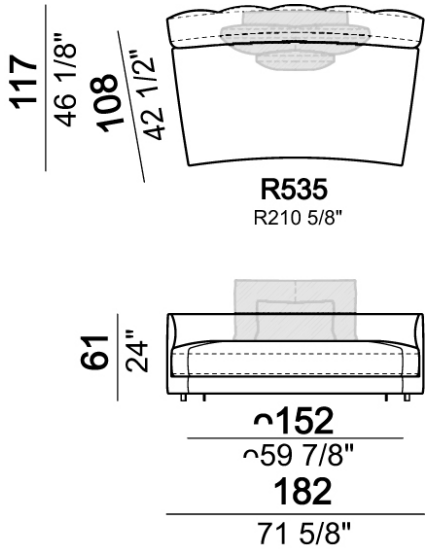

Central unit

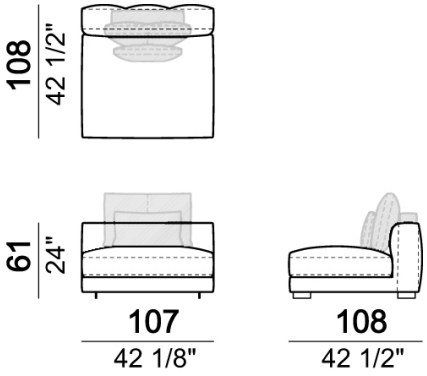

Composition 'M' (left unit 173x176 cm with angle 30° + right unit 232 cm + 2 back cushion sets 7100352 + 1 back cushion set 7100354 + 3 back cushions 55x40 cm)

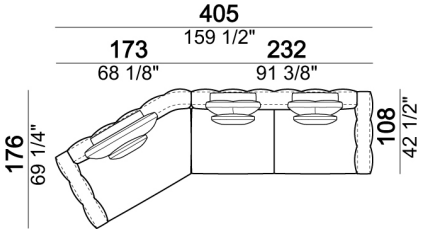

Composition 'F' (left unit 232 cm + pouf 105x108 cm + daybed with right long arm 172x174 cm + 2 back cushion sets 7100352 + 1 back cushion set 7100354 + 3 back cushions 55x40 cm)

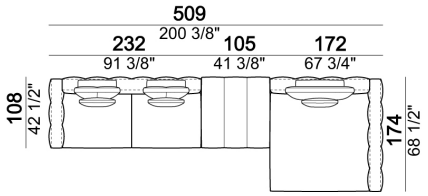

Composition 'N' (right unit 232 cm + right corner unit 232 cm + pouf 105x108 cm + 5 back cushion sets 7100352 + 2 back cushions 55x40 cm)

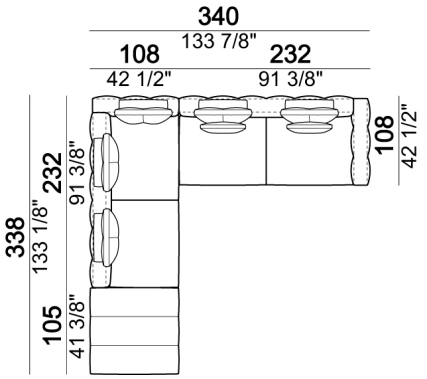

Composition 'B' (left semicircular unit 269 cm + pouf 105x108 cm + 2 back cushion sets 7100353 + 2 back cushions 55x40 cm)

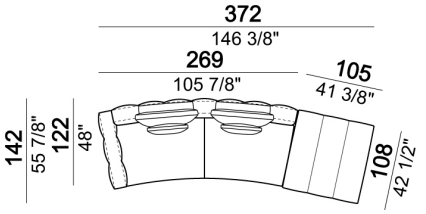

Right or left corner unit

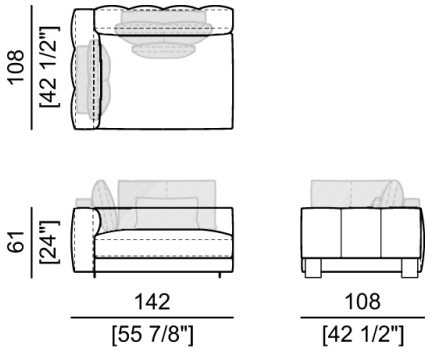

Central unit

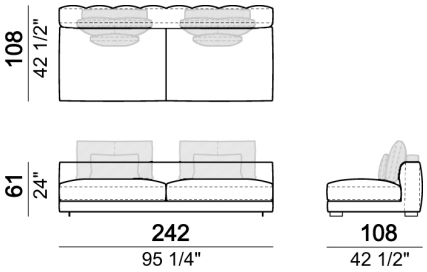

Right or left corner sofa

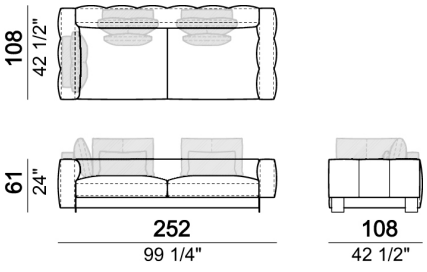

Composition 'Q' (left unit 232 cm + central unit 152 cm + chaise longue with right full arm 127x174 cm + pouf 173x108 cm + 3 back cushion sets 7100352 + 1 back cushion set 7100354 + 3 back cushions 55x40 cm)

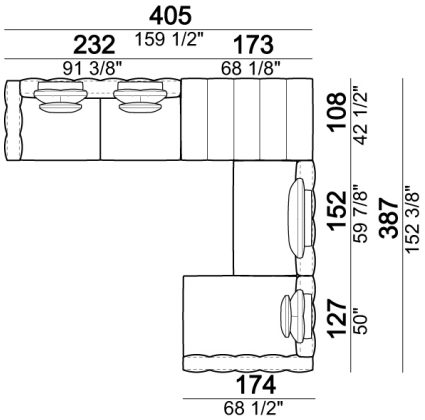

Right or left corner unit with right or left pouf.

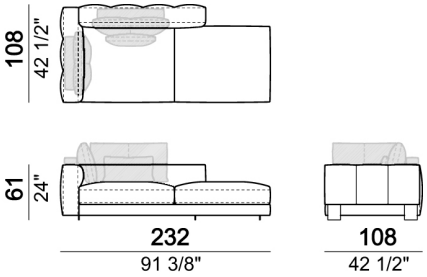

Sofa

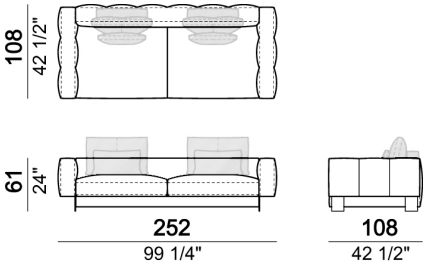

Composition 'D' (left semicircular unit 269 cm + daybed with right long arm 172x174 cm + 2 back cushion sets 7100353 + 1 back cushion set 7100354 + 1 back cushion 55x40 cm)

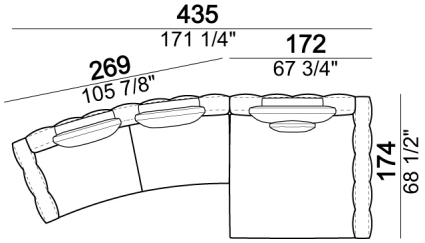

Right or left corner unit

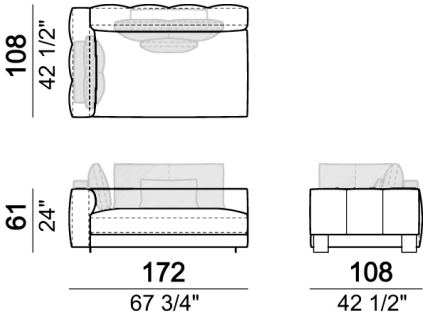

Composition 'A' (left unit 232 cm + chaise longue with right full arm 127x174 cm + 3 back cushion sets 7100352 + 3 back cushions 55x40 cm)

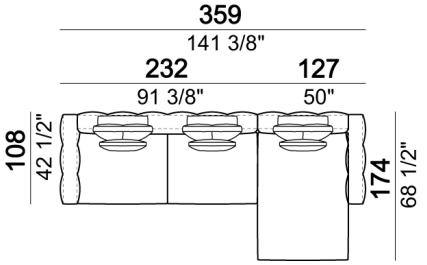

Composition 'C' (left unit 173x176 cm with angle 30° + central unit 152 cm + right daybed 172x174 cm + 3 back cushion sets 7100354 + 3 back cushions 55x40 cm)

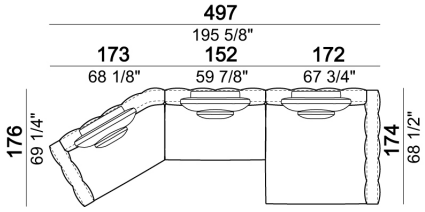

Composition 'R' (daybed 172x174 cm with left long arm + central unit 107 + right corner unit 262 cm + right unit 262 cm + 2 back cushion sets 7100352 + 4 back cushion sets 7100353 + 1 back cushion set 7100354 + 1 back cushion 55x40 cm)

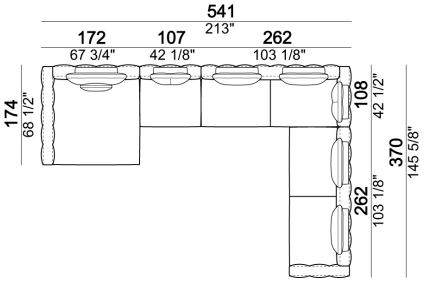

Back cushion

Central unit

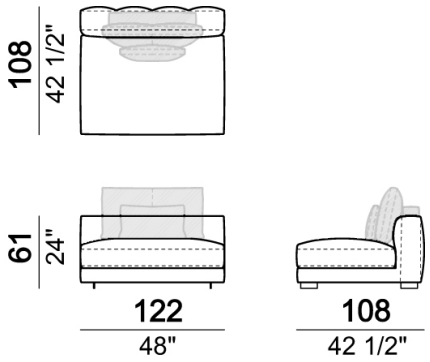

Dormeuse

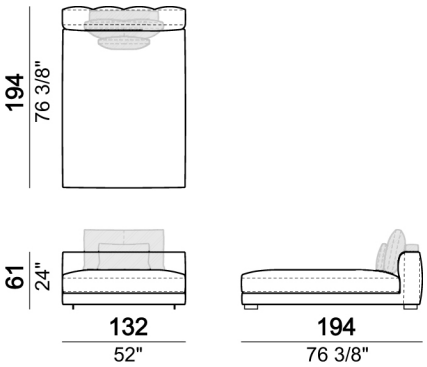

Central unit

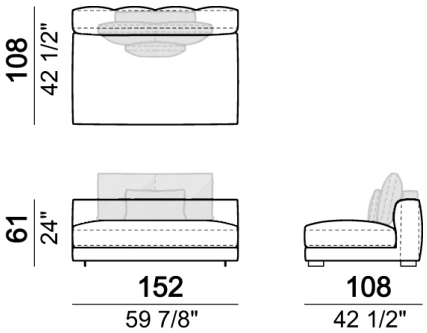

Right or left unit

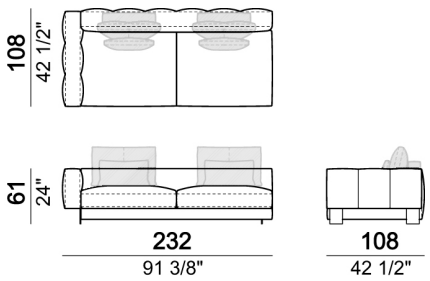

Right or left corner unit with right or left pouf.

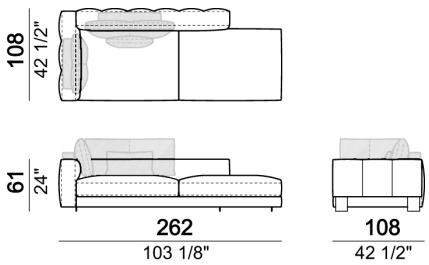

Pouf

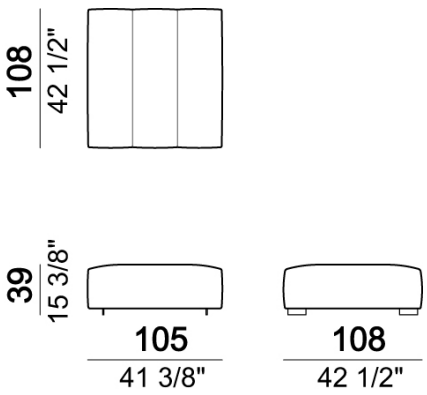

Curved sofa

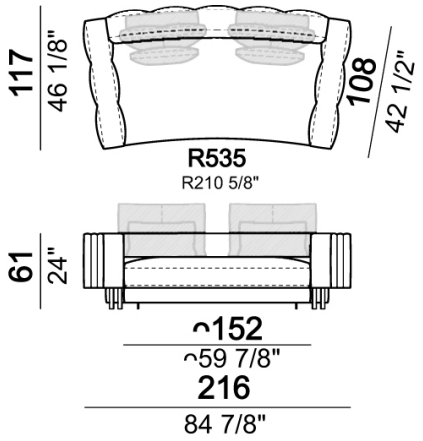

Right or left unit with angle 30°

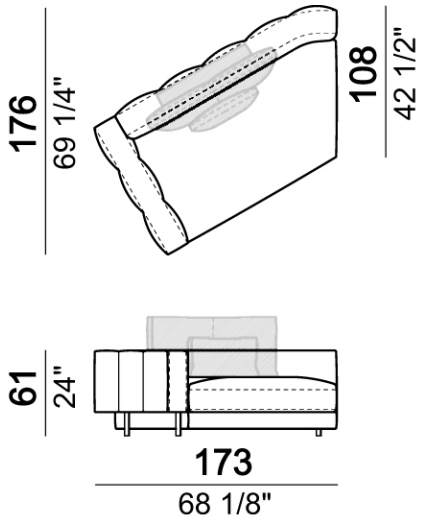

Right or left corner unit

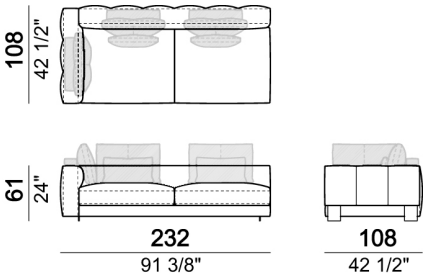

Composition 'S' (left semicircular unit 269 cm + curved pouf 113x173 cm + 2 back cushion sets 7100353)

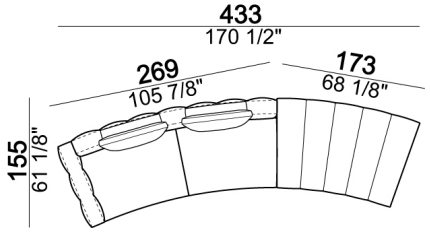

Right or left corner sofa

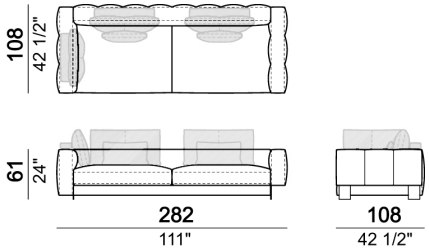

Curved sofa

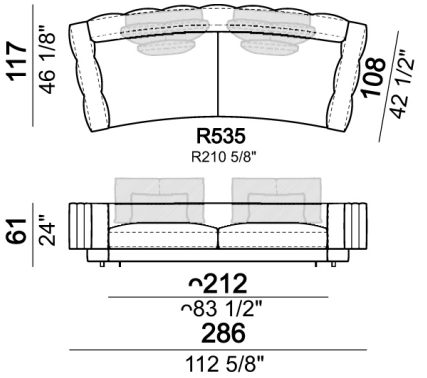

Right or left semicircular unit

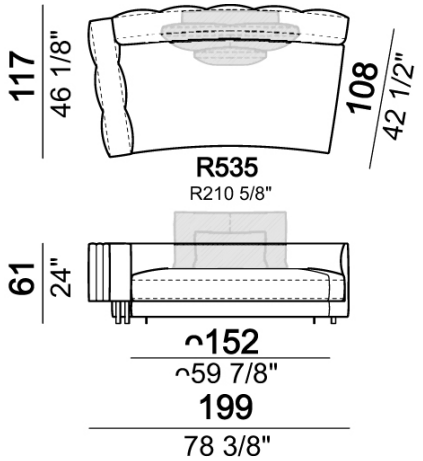

Central unit with right or left pouf

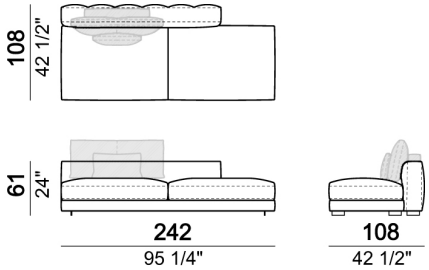

Central unit

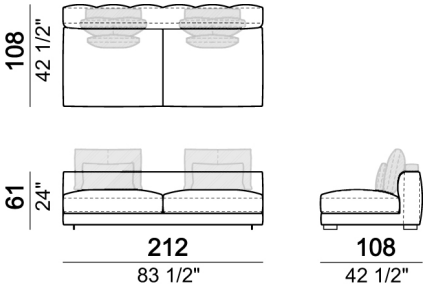

Right or left unit

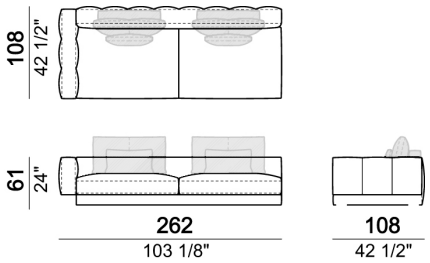

Central unit with right or left angle 30°

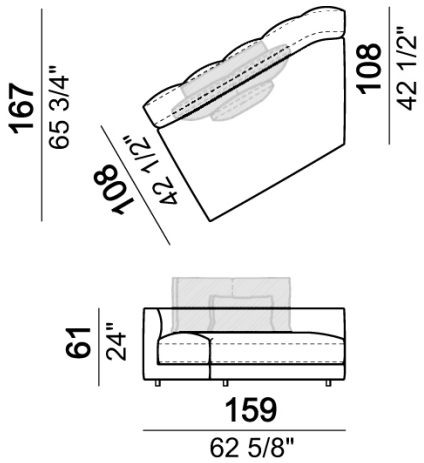

Composition 'E' (central semicircular unit 252 cm + dormeuse 132x194 cm + 3 back cushion sets 7100353 + 2 back cushions 55x40 cm)

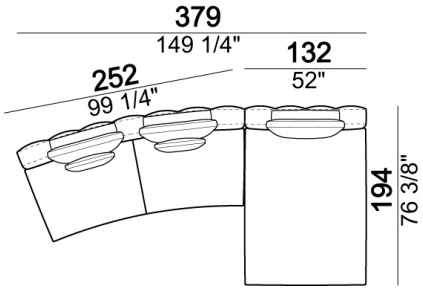
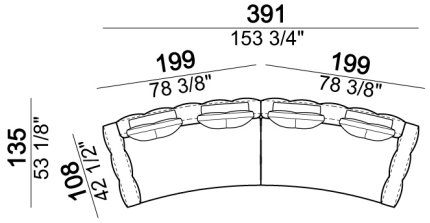
Composition 'L' (left semicircular unit 199 cm + right semicircular unit 199 cm + 4 back cushion sets 7100352)