ARKETIPO / INDOOR

SOFA PLAT 23

designed by Manzoni e Tapinassi 2004

STRUCTURE: varnished metal.
FRAME UPHOLSTERY: multi-density expanded polyurethane (D32PH+D30) covered with synthetic lining.
SEAT CUSHION UPHOLSTERY: multi-density expanded polyurethane (D40-memory foam) covered with synthetic lining (Cotherme).
BACK CUSHION UPHOLSTERY: expanded polyurethane D30 covered with Dacron 350gr and white cotton lining.
ROLL UPHOLSTERY: expanded polyurethane covered with coupled synthetic lining 180gr.
SPRINGING: electrowelded mesh.
SEAT HEIGHT: 40 cm – 44 cm with feet h.8 cm.
ARM HEIGHT: 54 cm.
FEET: plastic h.4 cm. The height of the foot can be made 8 cm on request, without extra charge.

ACCESSORIES: bookshelves and trays in marble or in smoked glass.
Metal parts of the marble bookshelves: micaceous brown, oxy grey or black nickel.

Right or left unit

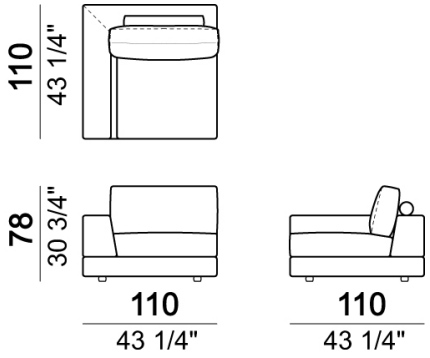

Tray

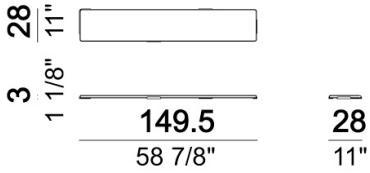

Right or left corner unit

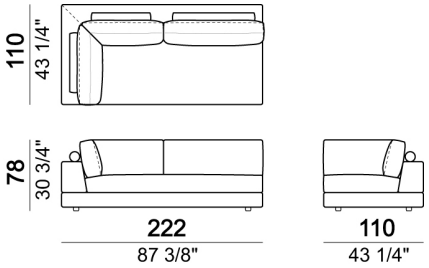

Relax unit type A 110 cm with right or left full arm

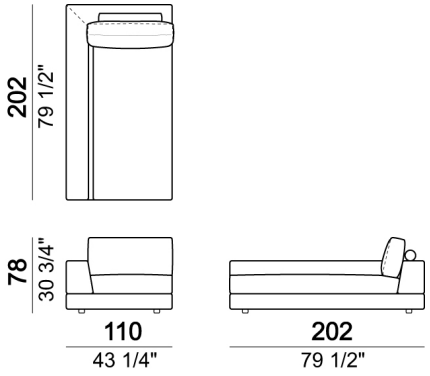

Sofa with back plat - depth 138 cm.

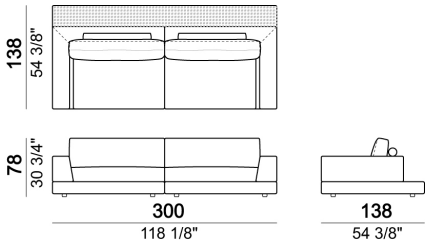

Pouf

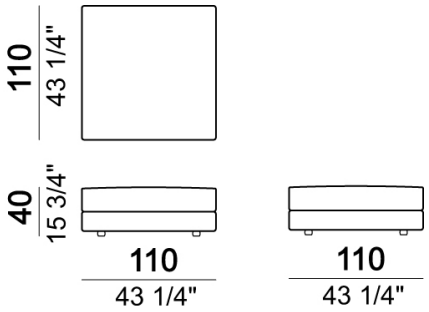

Right or left unit

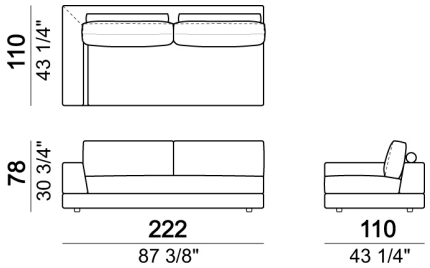

Right or left unit

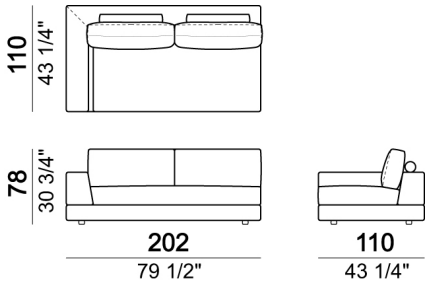

Right or left corner sofa with back plat - depth 138 cm.

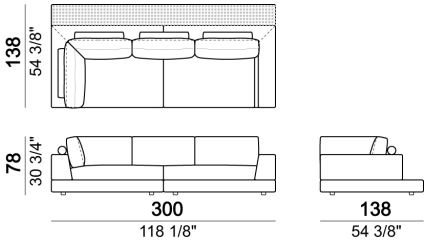

Sofa

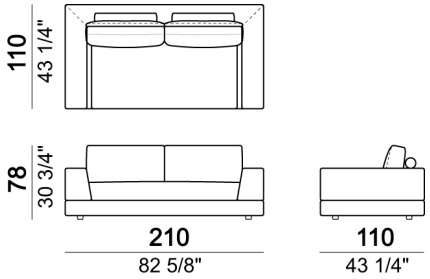

Bookshelf

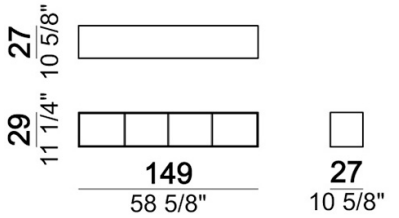

Relax unit type A 138 cm with right or left full arm

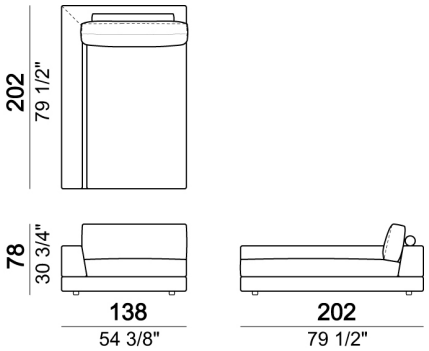

Composition "H" (left unit 222 cm with back plat - depth 138 cm + right unit 222 cm + pouf with side plat).

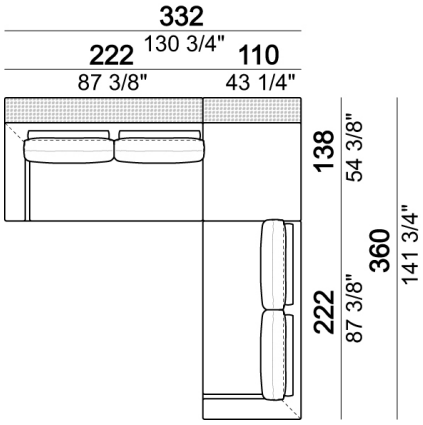

Pouf

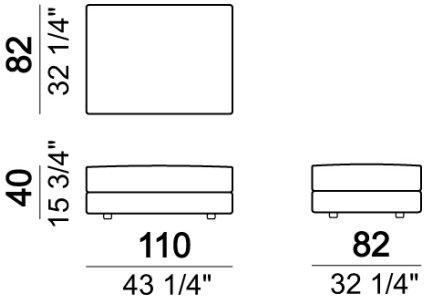

Bookshelf

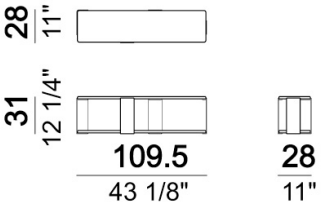

Composition "L" (left corner unit 250 cm with left plat + pouf with corner plat + central unit 110 cm + central unit 154 cm with back plat).

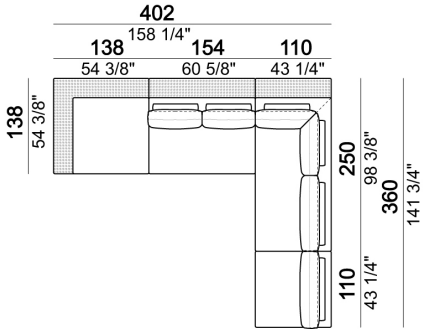

Sofa with back plat - depth 138 cm.

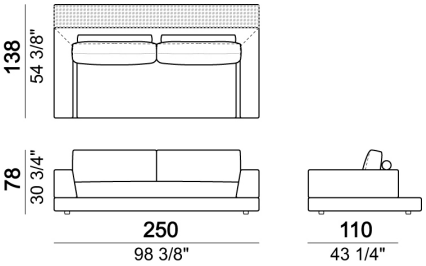

Central unit

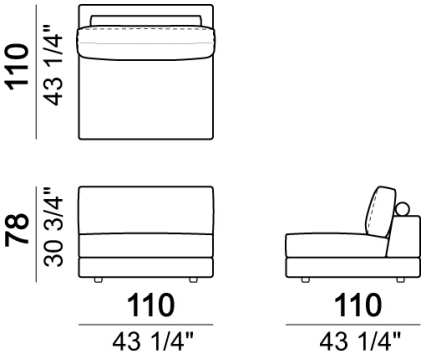

Sofa

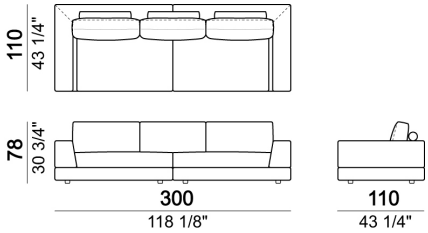

Bookshelf

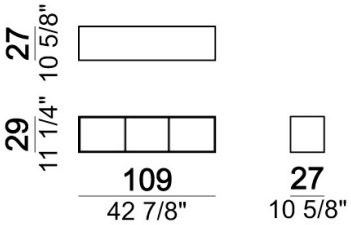

Central unit

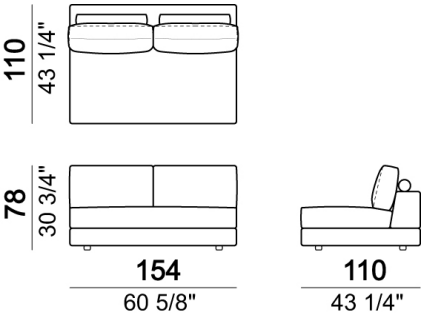

Unit with right or left arm and plat

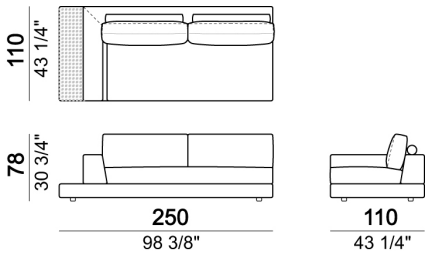

Sofa

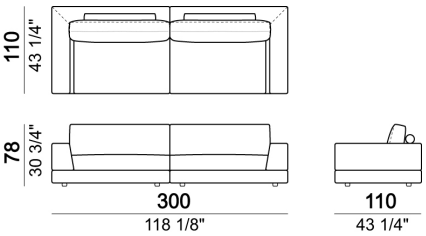

Right or left corner unit with back plat - depth 138 cm.

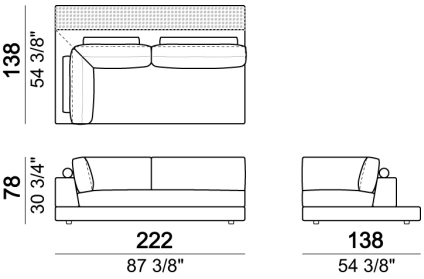

Right or left unit

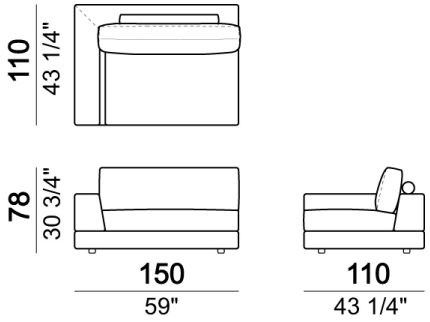

Relax unit type B 138 cm with right or left plat

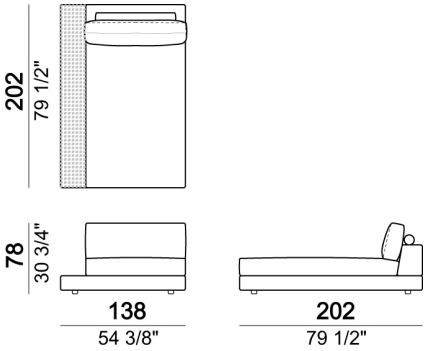

Pouf with corner plat

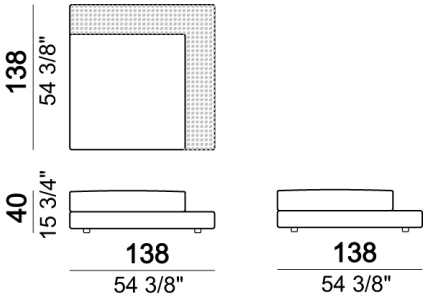

Sofa

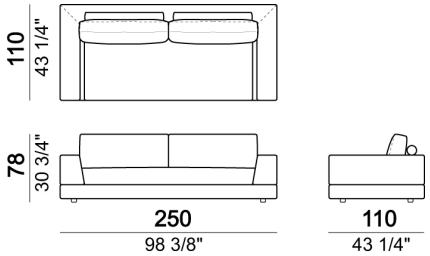

Pouf

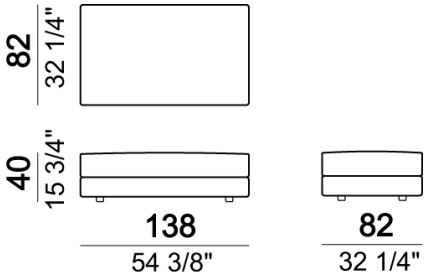

Composition "D" (Relax unit type B 138 cm with left plat + right unit 222 cm).

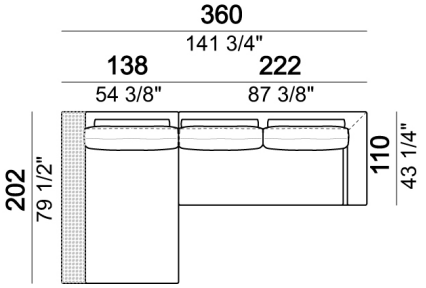

Central unit with back plat - depth 138 cm.

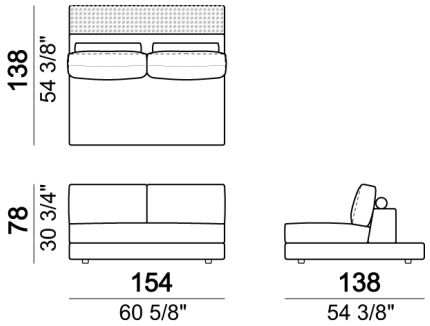

Composition "N" (left unit 222 cm with back plat - depth 138 cm + pouf with side plat + Relax unit type D 138 cm with right full arm and back plat).

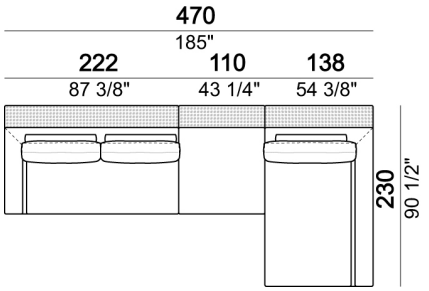

Relax unit type C 138 cm with right or left full arm and right or left plat.

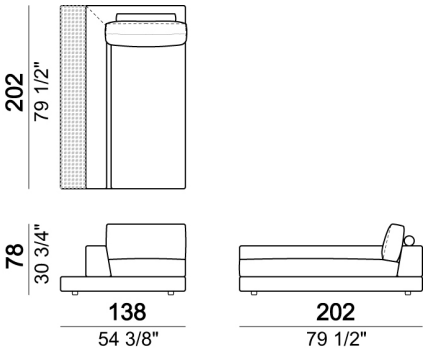

Bookshelf

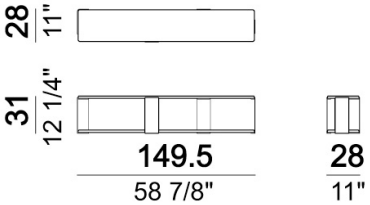

Square corner

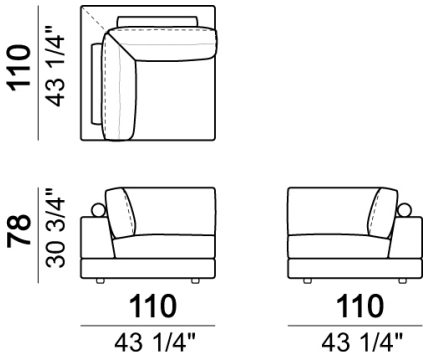

Tray

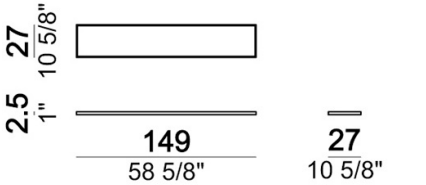

Right or left corner unit

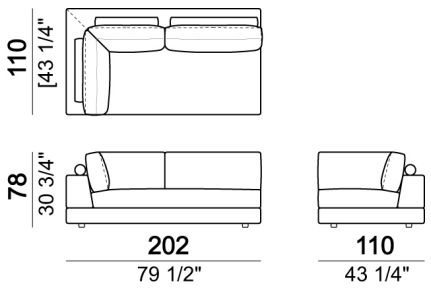

Sofa with back plat - depth 138 cm.

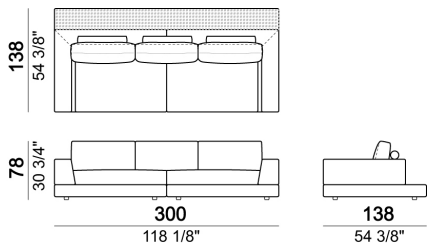

Composition "A" (Relax unit type B 110 cm with right plat + left unit 202 cm).

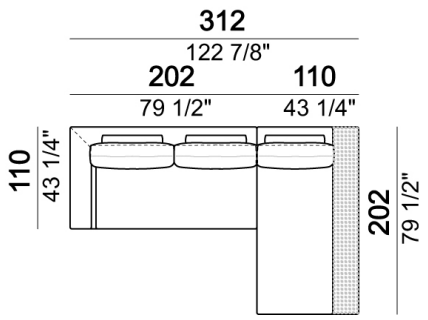

Composition "B" (Relax unit type A 110 cm with right full arm + left unit 202 cm).

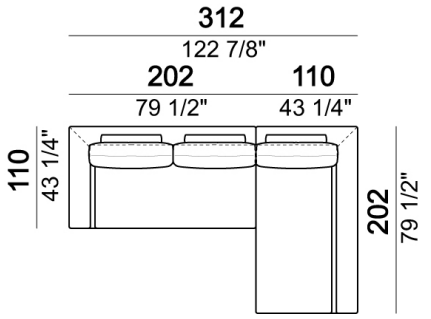

Composition "E" (Relax unit type D 138 cm with left full arm and back plat + right unit 222 cm with back plat - depth 138 cm).

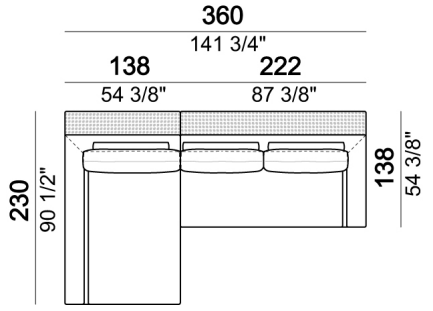

Pouf with side plat

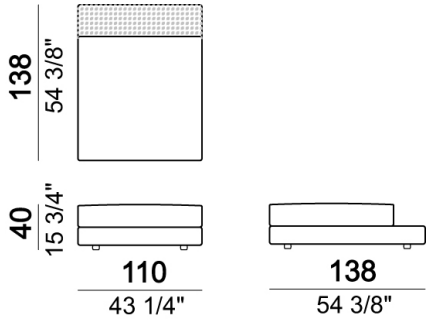

Central unit with back plat - depth 138 cm.

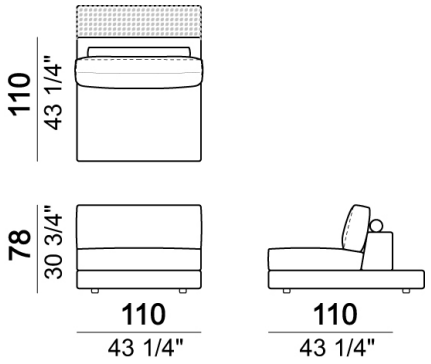

Composition "C" (Relax unit type C 138 cm with left full arm and plat + right unit 222 cm).

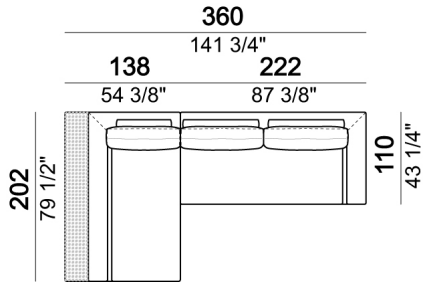

Relax unit type B 110 cm with right or left plat

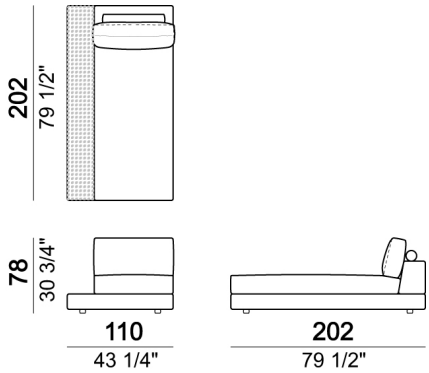

Relax unit type D 138 cm with right or left full arm and back plat.

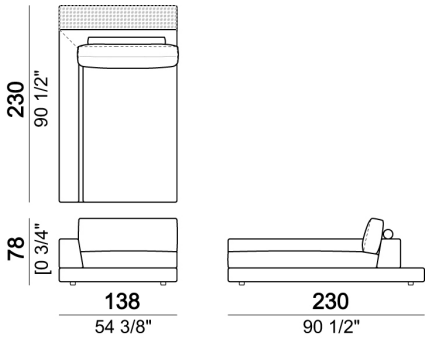

Composition "I" (Right unit 222 cm with back plat - depth 138 cm + left unit 222 cm with back plat - depth 138 cm + pouf with corner plat).

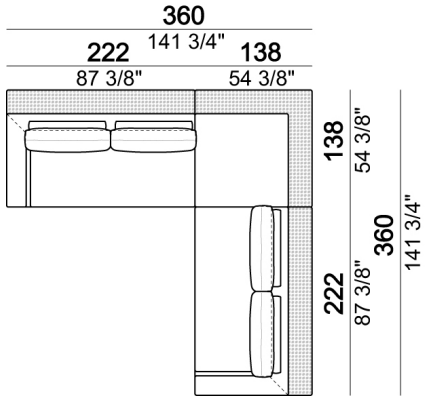

Unit with right or left arm and plat

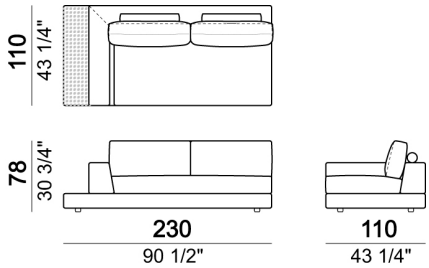

Composition "G" (Right corner sofa with back plat - depth 138 cm + right unit 202 cm).

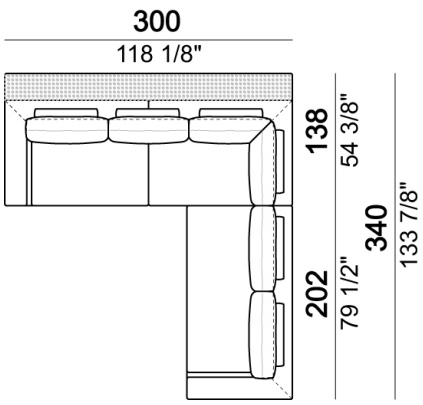

Right or left corner unit with plat

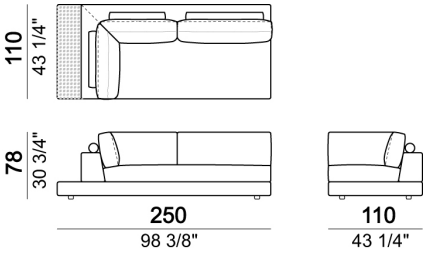

Tray

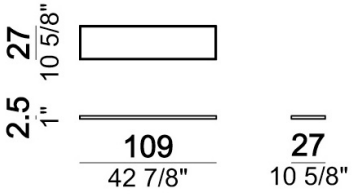

Composition "M" (right unit 222 cm with back plat - depth 138 cm + pouf with side plat + central unit 154 cm + Relax unit type B 138 cm with left plat).

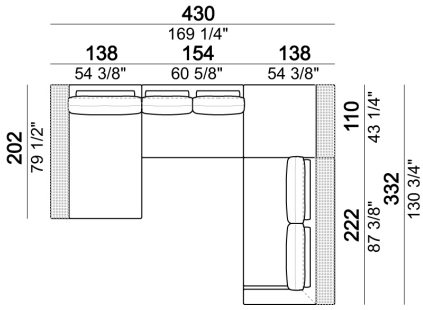

Relax unit type C 166 cm with right or left full arm and plat

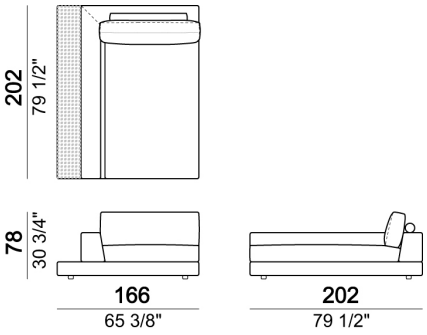

Tray

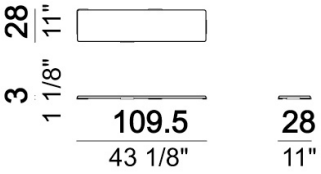

Sofa

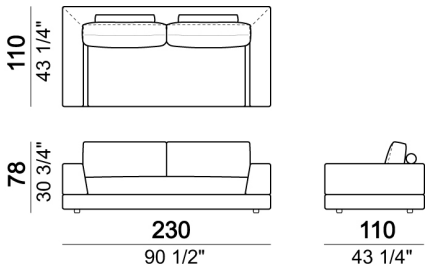

Right or left unit with back plat - depth 138 cm.

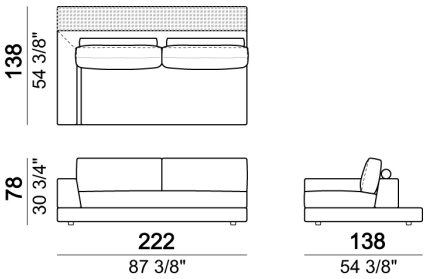
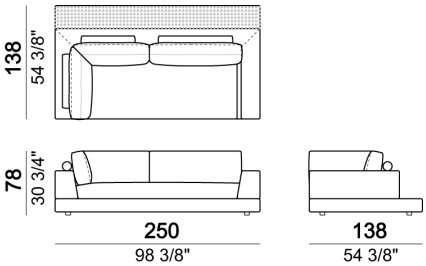
Right or left corner sofa with back plat - depth 138 cm.