ARKETIPO / OUTDOOR

SOFA SANTOS

designed by Gino Carollo 2022

STRUCTURE: solid iroko wood with water-repellent vegetable oils finish.
SPRINGING: plywood okumé.
UPHOLSTERY - STANDARD VERSION:
SEAT, BACK, ARM CUSHIONS AND BACKREST ROLL: high resilient, waterproof, multi-density non-deformable polyurethane foam. Inner cover in breathable and waterproof polyester, which improves protection from water and moisture. Back and arm cushions and the backrest roll have a weighted insert to increase stability.
UPHOLSTERY - DRAINING VERSION:
SEAT, BACK, ARM CUSHIONS AND BACKREST ROLL: open-cell expanded polyurethane DRYFELL S covered with 3D filter lining.
PILLOW: polyester fibre covered with waterproof laminated canvas and breathing net to allow water draining.
SHELVES AND TOPS: solid iroko wood with water-repellent vegetable oils finish.
SEAT HEIGHT: 42 cm
ATTENTION: the upholstery cannot be exposed to constant and heavy rains. We suggest using our protective covers made of breathable and waterproof polyester marine canvas, ideal to prevent mould formation. They can be washed with neutral detergent, Please do not fold wet covers and store them only when dry.

Coffee table T1

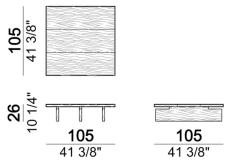

Back S1

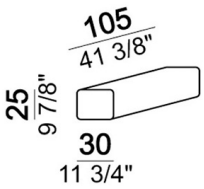

Composition ‘H’ (cod.6111242/6111102 + cod.6111231/6111291 + 2 set Relax + 1 cushion 67x50 cm. + 1 small table T4)

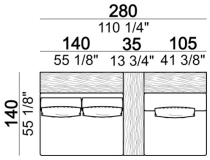

Composition ‘B’ (cod.6111233/6111293 + 2 set Relax + 2 small tables T4)

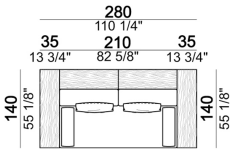

Seat unit B3 + shelf

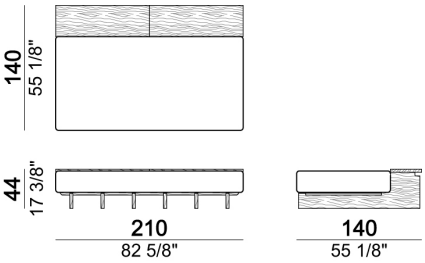

Set relax (Roll + back cushion)

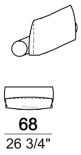

Composition 'N' (unit 6111213/273 + unit 6111233/293 + 4 cushions 67x50 cm + roll)

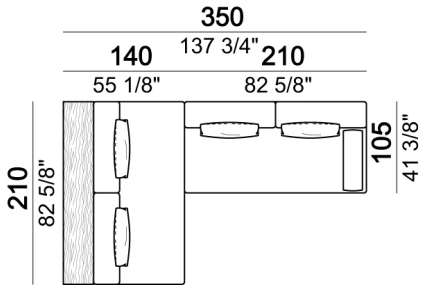

Seat unit A2R + Back S1

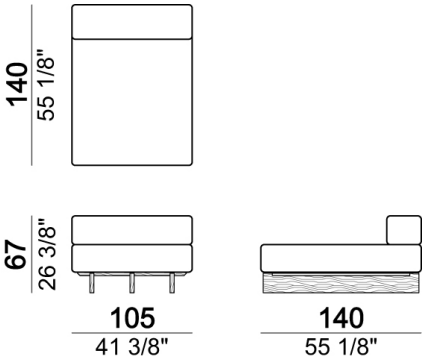

Composition ‘I’ (cod.6111233/6111293 + cod.6111212/6111272 + 2 set Relax + 1 cushion 67x50 cm. + 1 small table T4)

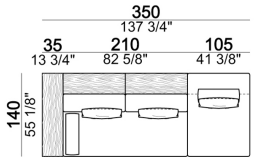

Back cushion

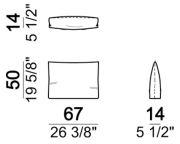

Composition 'L' (unit 6111213/273 + 2 cushions 67x50 cm + 2 rolls)

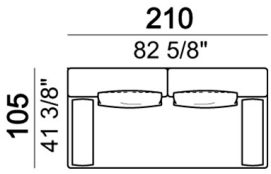

Composition ‘E’ (cod.6111213/6111273 + cod.6111233/6111293 + cod.6111212/6111272 + 3 set Relax + 1 cushion 67x50 cm. + 1 small table T2R

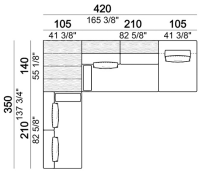

Coffee table T5

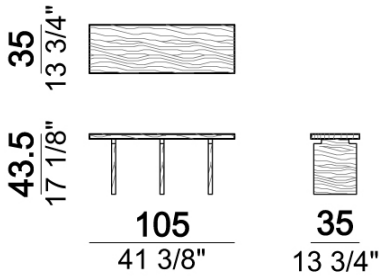

Seat unit A1 + Back S1

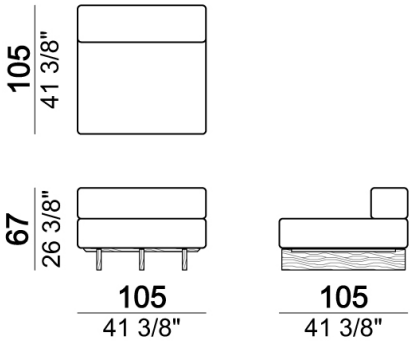

Coffee table T2

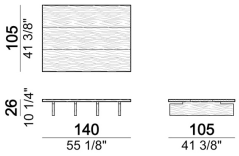

Composition 'O' (unit 6111213/273 + unit 6111233/293 + unit 6111212/272 + unit 6111202/262 + set relax + 4 cushions 67x50 cm + 2 rolls + coffee table T2R)

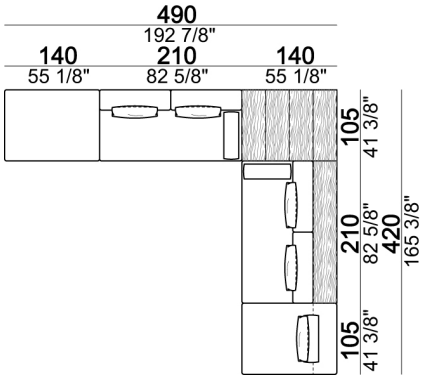

Composition 'M' (unit 6111213/273 + unit 6111233/293 + 2 cushions 67x50 cm + back cushion S1 + roll)

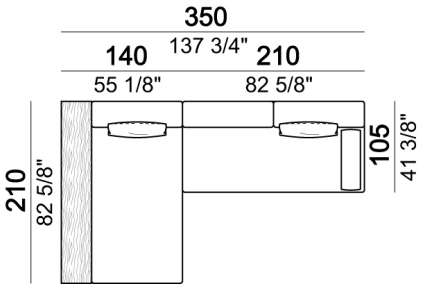

Seat unit B2 + shelf

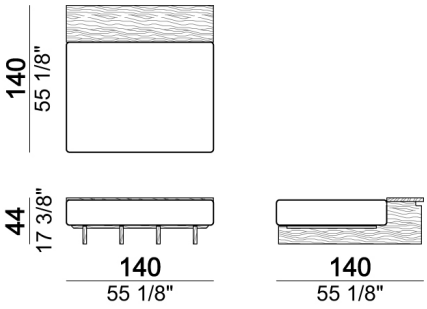

Seat unit B3 + shelf + 2 Backs S1

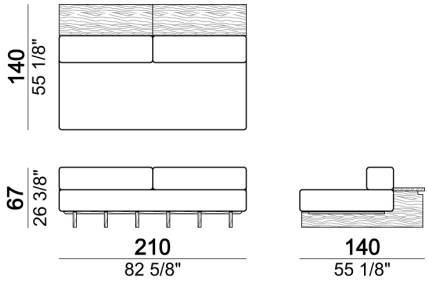

Seat unit A2

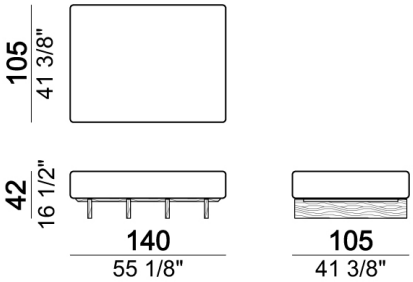

Seat unit A2 + Back S2

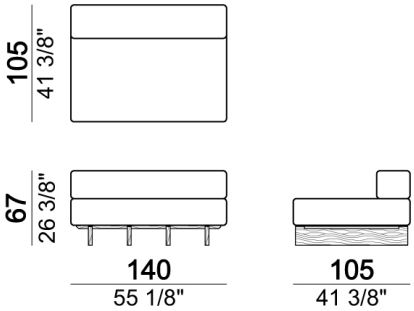

Seat unit B2 + shelf + Back S2

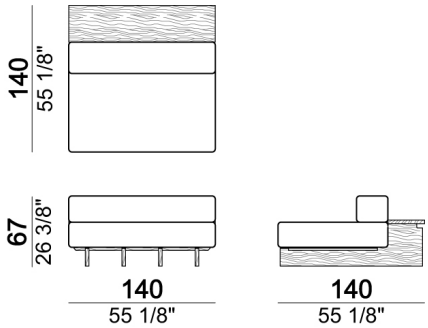

Coffee table T2R

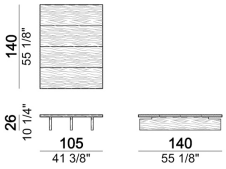

Seat unit A3 + 2 Backs S1

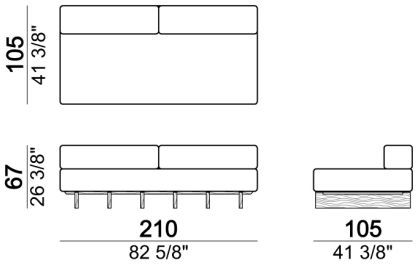

Composition 'P' (unit 6111213/273 + unit 6111223/283 + back cushion S1 + 3 cushions 67x50 cm + roll + coffee table T1)

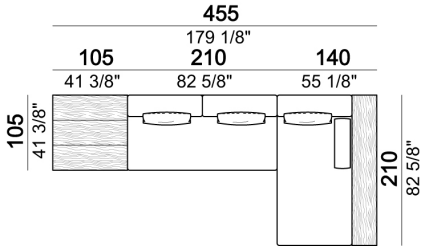

Armcushion

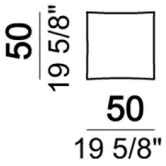

Seat unit B1 + shelf + Back S1

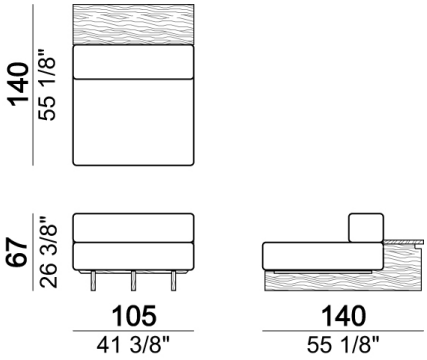

Seat unit B1 + shelf

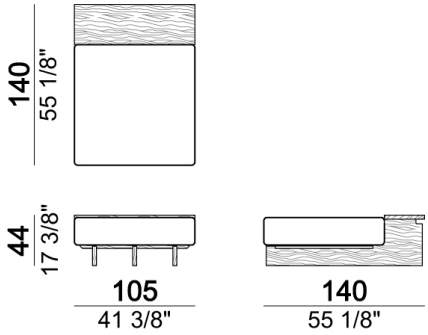

Composition 'D' (cod.6111221/6111281 + cod.6111231/6111291 + 2 set Relax + 1 small table T4)

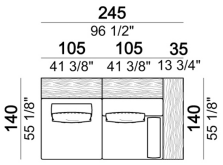

Seat unit A1

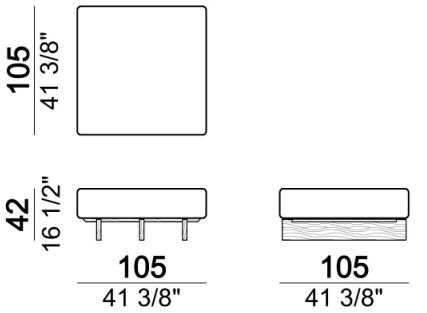

Roll for arm or back cushion support

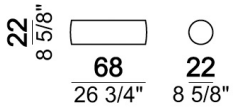

Coffee table T4

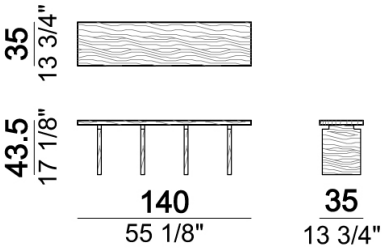

Seat unit A2R

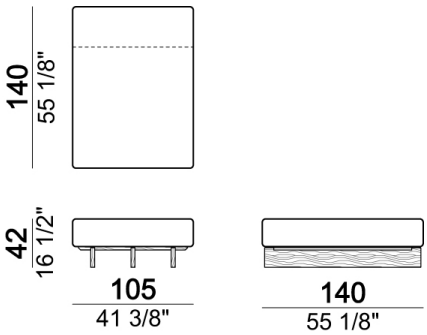

Seat unit A3

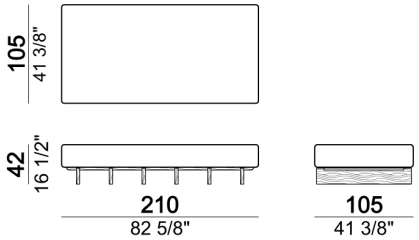

Composition 'A' (2 cod.6111222/6111282 + 2 set Relax)

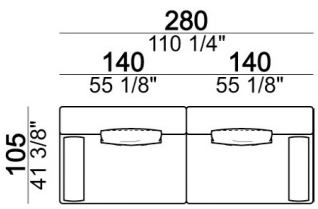
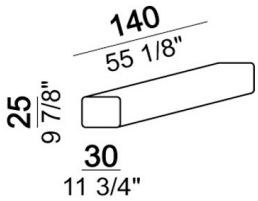
Back S2